[illegible] Bundt [illegible]

[illegible] **Bundt** [illegible]

- 1.0 [illegible];
[illegible], [illegible], [illegible], [illegible]
- [illegible]
- [illegible] Heightening [illegible]

[illegible] **Bundt**

Custom Design Chart

—— Tsingbuy bakeware manufcaturer

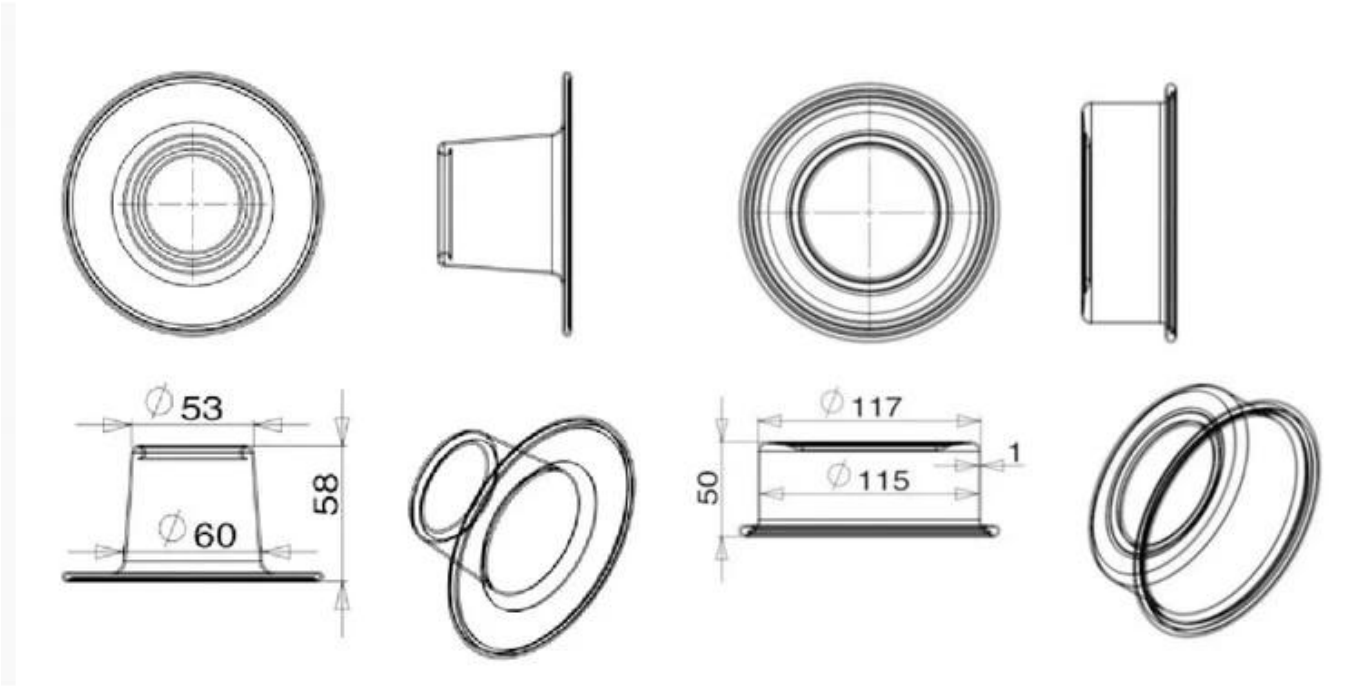

117mm(inner)
53cm
58 mm
50 mm
115 mm

Bundt □□□□□□□□□□□□ appli□□□n

:**Manufcaturer**