□□□□□□□□□□□□□□ Aluminized □□ □□□□□□□□□

□□□□□□□□□□□□□□□□□□□ aluminized □□□

1. □□□□□□□□ 1.0mm □□□ □□□□□□□□□□□□□□□□□□□□□, □□.

2 □□□□□□□□□□□□□□□□□□□□□□ PTFE □□ demould □□□□□□□□□□□□□□□□□□□□□□□□□□□□□□□□ □□□

3 dsigned □□ □□□□□□□□□□□

4 □□□□□□□□□ □□□□□□□□□□□□□□□□□□□□□□□□□□□□□□ □□□.

5 □□□ srvice □□□

6 □□□, □□□□□□□, □□□□□□□□□□□□□□□□□□□□□□□□□□□□□□□ □□□

7 ODM □□□ OEM □□□□□□□□□□□□□ Tsingbuy □□□.

8 Tsingbuy □□, □□□□□□□□□□□□□□□□□□□□□□□□□□□□□□□□□□□□□□□ bakeware □□ 12 □□

□□□□□□□□□□□□□□□□ 250/450/750/900/1000 / 1200G □□□□□□ aluminized □□□□□□□□□□□□□□□□□□□□□□ □□□□□□□□□□□□□□□□□□□□□□□□□□□□□□□

Specifications

250G

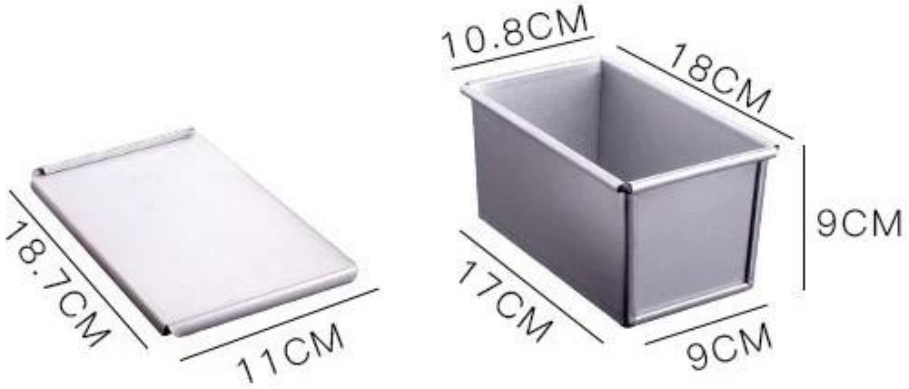

450G

750G

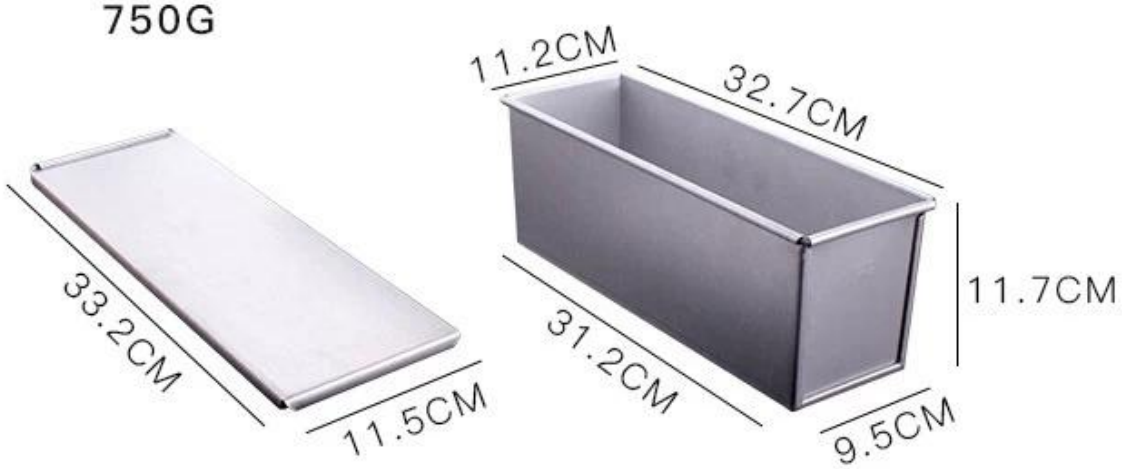

900G

1000G

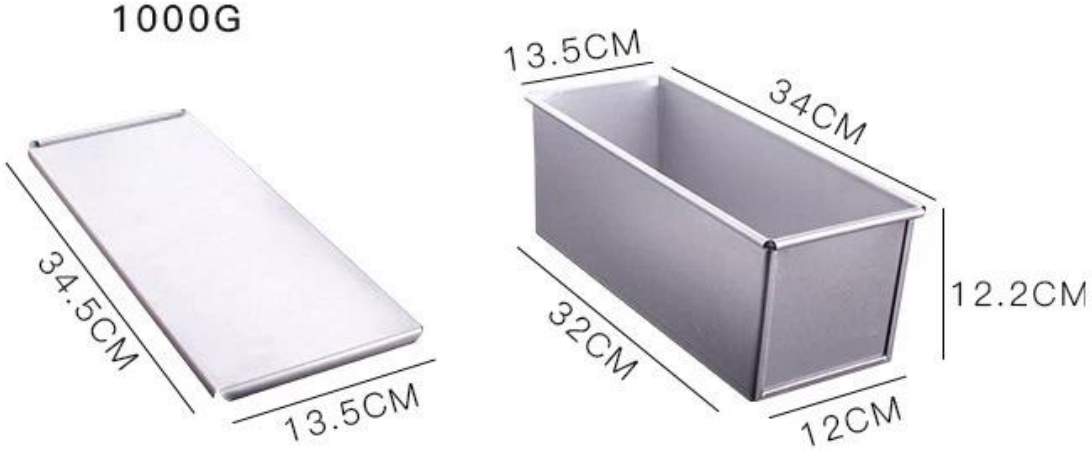

1200G

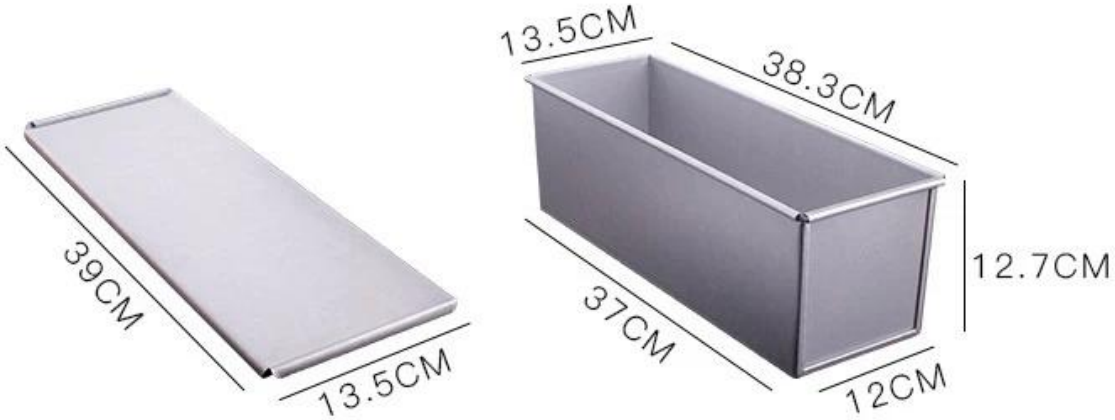

□□□□□□□□□□ □□□

□□□□□□□□□□□□□□□□□□□□□□□ □□□□□□□□□□□□□□□□□□□□□□□□□□□□□□□□□□NS□□□□□□□□□□□□□□□ ur.

□□ s□□□□□□ Imple □□□□□□□□□□□ Practica□□□□□ □□□ □□□□□□□□□□□□□□□□ □□□□□□□□□□□□□□□□□□□□□□

□□□□□□□□□□□□□□□□□: □□

□□□□□□□□□□□□□□□□□□□: □□□

□□□□□□□: □□

□□□□□□□□□□□□□□□□□□□: □□□□□□□□□□□□□□□□□□□□□□□□□□□□□□□□□□□□□□ □□□□□□□□ □□□□□□□□□□□□□□□□□□□□□□□□□□□□□

□□□□: □□□□□□□

□□□□□: □□□

Tsingbuybakeware□□□□□□□□□□□□□equiped□□20□□□□□□□□□

□□□□□□□□□□□□□□□□bakeware□□□□□□□□□□.□□
□□□□□□□□□[□□□□□□□□□□□□□□□□□□]().

Automatic Cutting Machine	Automatic Punching Machine	Punching Machine
Bending Machine	Sand Blasting Machine	Drying Machine

No.	Production Process	No.	Production Process	No.	Production Process
1	Cutting	2	Automatic Punching	3	Punching
4	Bending	5	Welding	6	Polishing
7	Sand Blasting	8	Cleaning	9	Spraying
10	Drying				

Loaf Pan

Tsingbuy Industry Limited

TSINGBUY | 天仕迈