4/5/6/7/8/9/10[illegible]

[illegible]

4/5/6/7/8/9/10[illegible]

-1.0[illegible]
- [illegible]
- [illegible]
- [illegible]

- [illegible]

[illegible]	[illegible] [illegible]***x***[illegible]***x***[illegible]	[illegible] [illegible]***x***[illegible]
4[illegible]	100x95x98mm	92x100mm
5[illegible]	127x122x100mm	120x110mm
6[illegible]	150x143x97mm	139x110mm
7[illegible]	177x168x99mm	165x100mm
8[illegible]	205x197x100mm	195x100mm
9[illegible]	226x217x100mm	215x110mm
10[illegible]	251x242x100mm	240x110mm

- [illegible]Tsingbuy[illegible] ODM[illegible]OEM[illegible]

4/5/6/7/8/9/10[illegible]

Deep Anodized Aluminum Round Cake Pan with hollow in center

Round Cake Mold Specification

4″

5″

6″

7″

205mm
8″
100mm
197mm

226mm
9″
100mm
217mm

251mm
10″
100mm
242mm

353mm
14″
100mm
342mm

specification of hollow mold

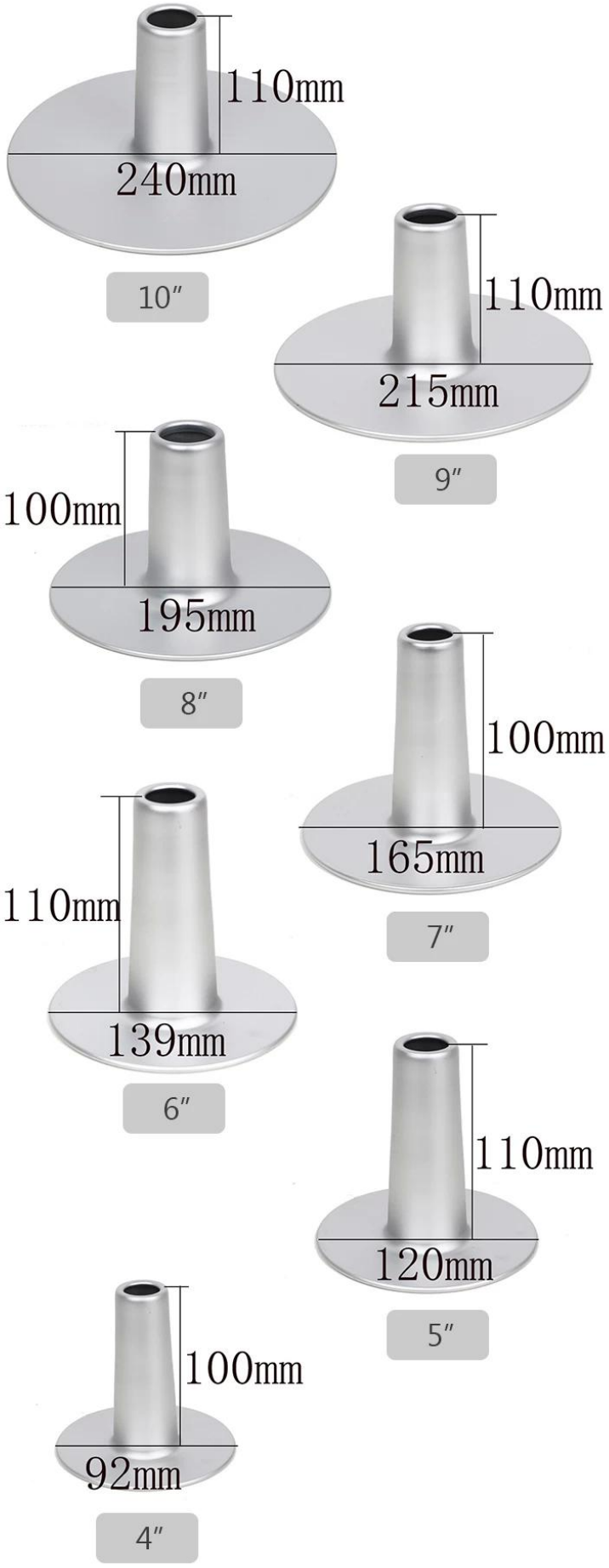

Product Features

1.0mm high quality aluminum alloy
high temperatures resistant up to 380℃

Rolled Edge design
One piece forming,
stable structure,
smooth and
no injury to hands

Anodizing treatment
Effectively reduce
oil adsorption,
easy to clean,
corrosion resistant

Product Shots

□□□□□□□

Zoe Lee	TSINGBUY INDUSTRY LIMITED FACTORY PLANET OEM & ODM - Bakeware and Customization
Tel	+86 186 1186 6087 +86 0755-85234769
Email	marketing@tsingbuy.com
Skype	+86 186 1186 6087
Whatsapp	+86 186 1186 6087
Web	www.chinabakeware.com
ADD	2 Floor B1 Building,No 22 Dafu Industry park,Guanlan,Longhua District, Shenzhen, China 518110