□□□□

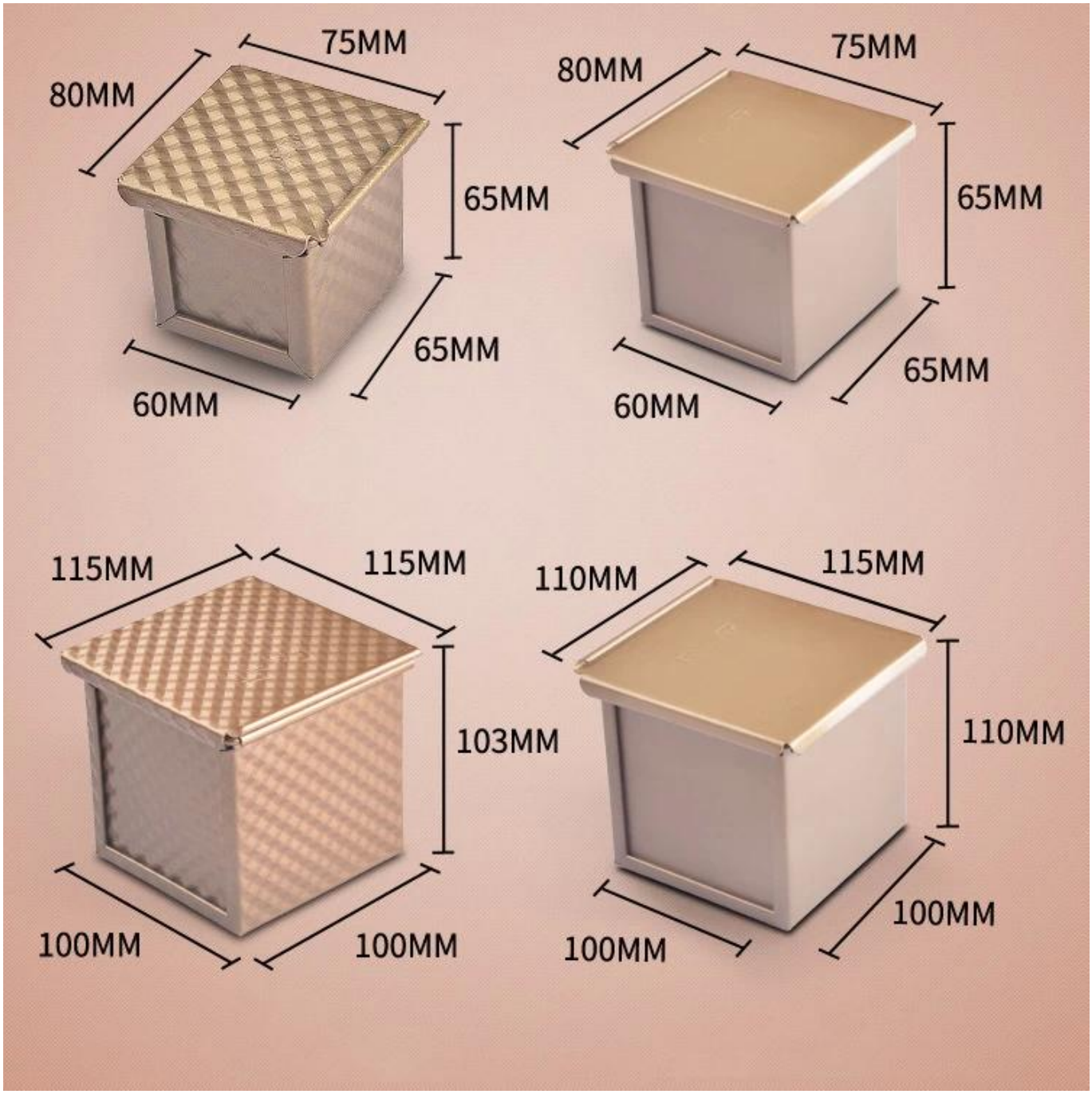
75MM
80MM
65MM
65MM
60MM
75MM
80MM
65MM
65MM
60MM
115MM
115MM
103MM
100MM
100MM
110MM
115MM
110MM
100MM
100MM

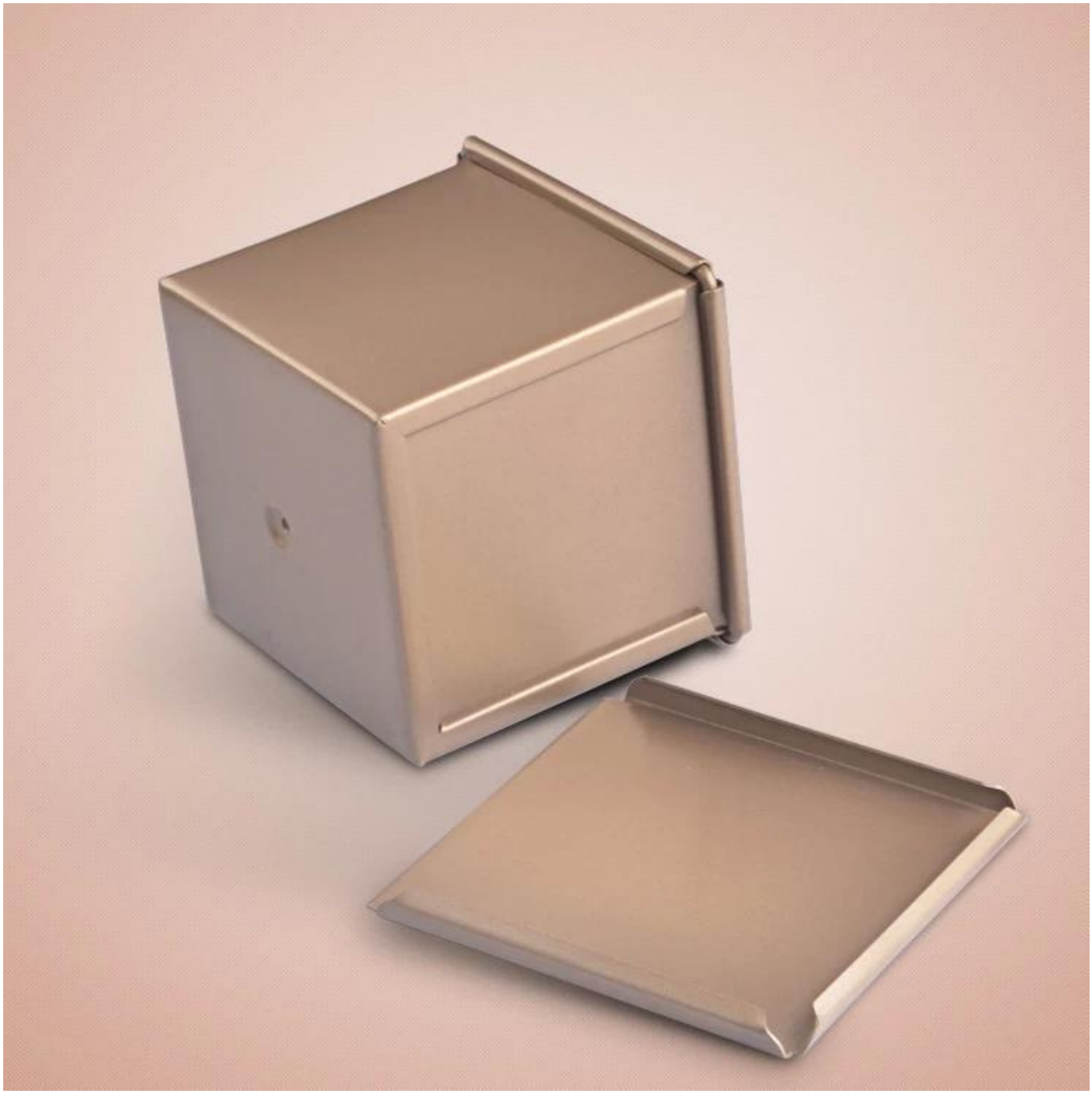

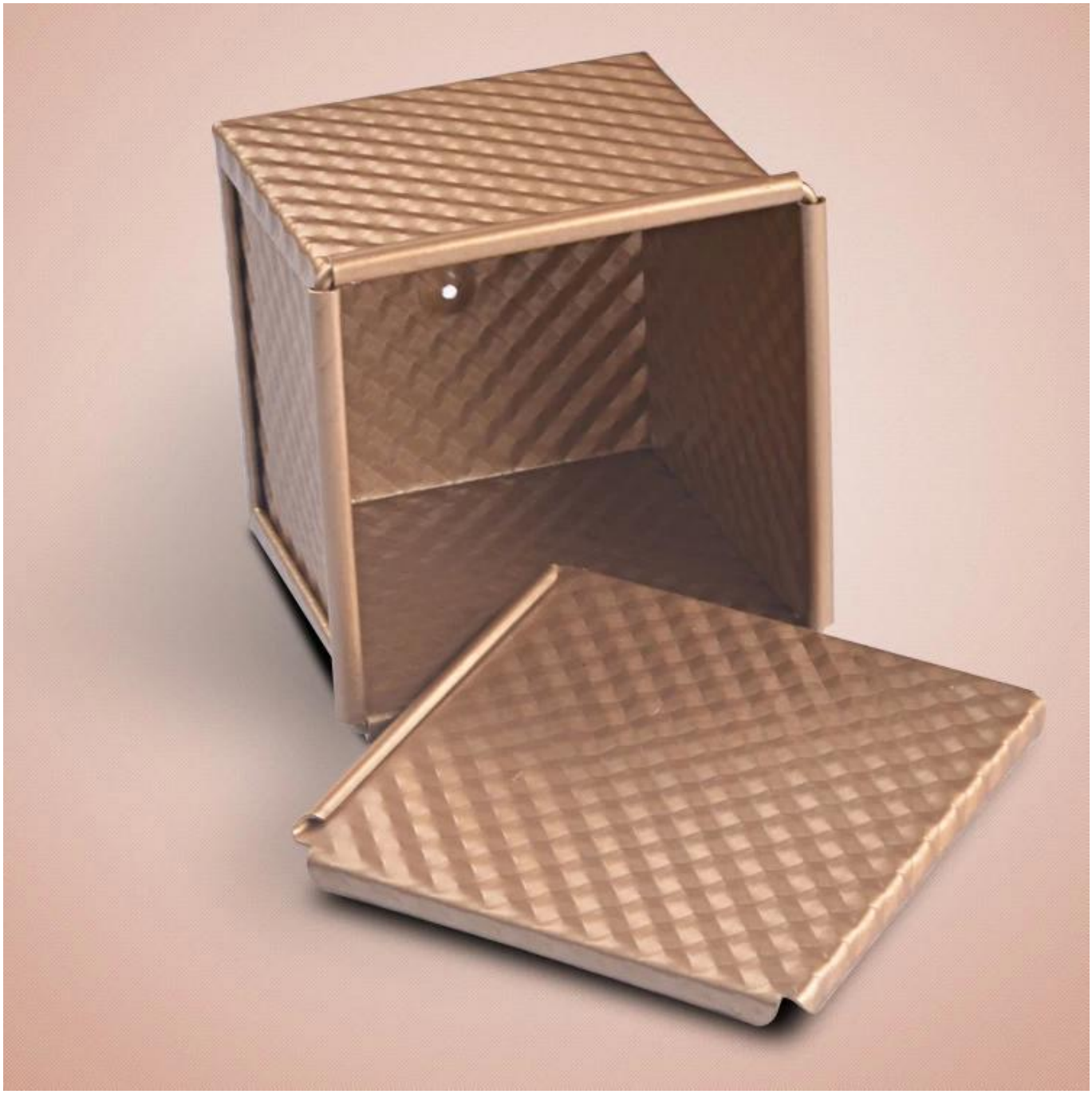

□□□□□□□□ □□□□□□□□□□□□ **Tsingbuy□□**

□□□□□lo lo□□□□□□□□□□□□□□□Tsingbuy

customized single loaf pan

Material:

Aluminum alloy

Aluminized steel

More Customzied Strap Loaf Pans from Tsingbuy

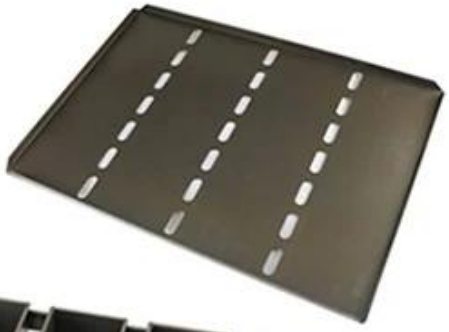

Customized shape

Customized size

Rack matched

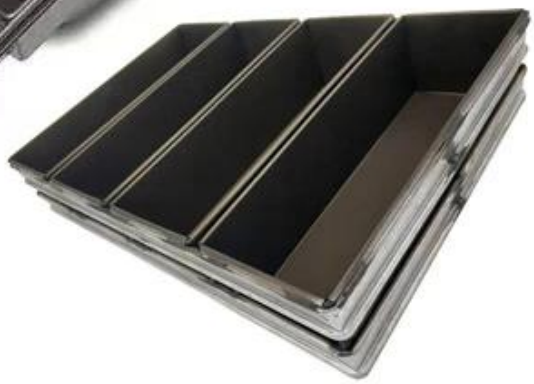

Customized Single Loaf Pan

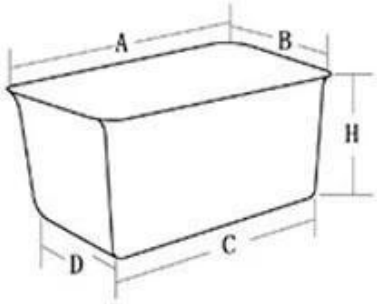

A.Top length of the item
B.Top width of the item
C.Bottom length of the item
D.Bottom width of the item
H.Height

Customized Strapped Loaf Pan Sets

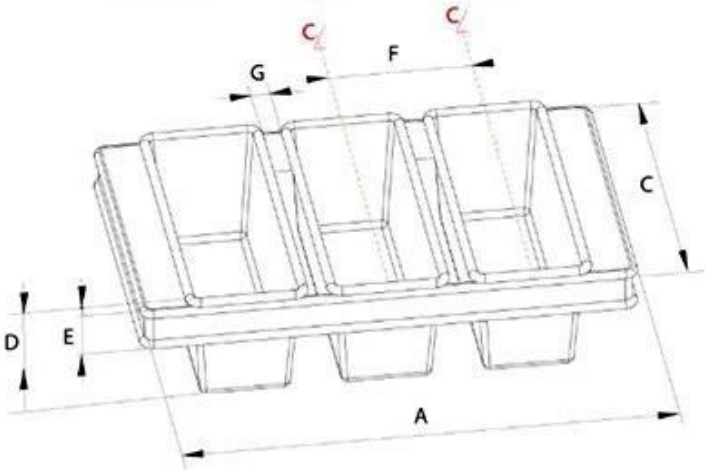

A.Overall Length
C.Overall Width
D.Depth
E.Frame Height
F.Center-to-center
G.Pan Distance

Flat handle

Frame handle

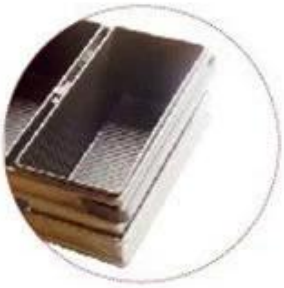

no handle

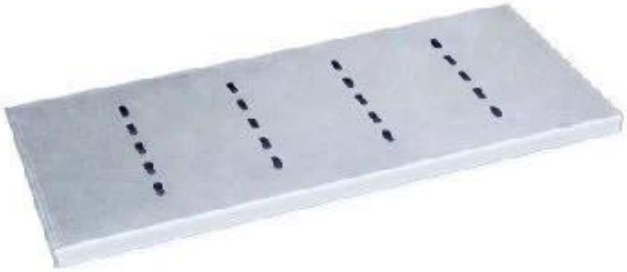

Matching lid (Drop Style)

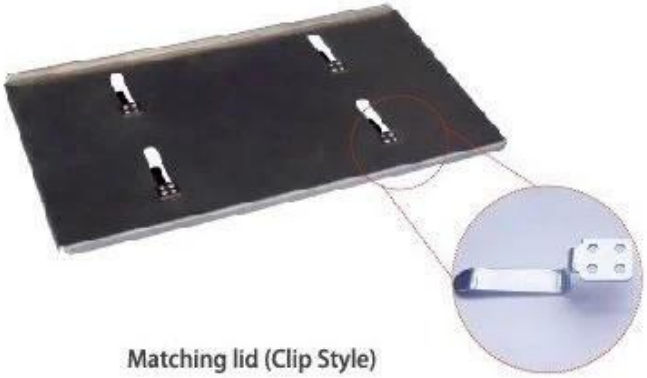

Matching lid (Clip Style)

□□□□□□□□□□□□□□□□□□□□

Loaf Pan

Tsingbuy Industry Limited

TSINGBUY | 天仕迈