[illegible]60-150CM[illegible]

[illegible] 60-150cm[illegible]

- 1.5mm[illegible] [illegible] Tsingbuy[illegible] [illegible]

- [illegible]

[illegible]3[illegible]

- [illegible]

48[illegible]2[illegible]1[illegible]1[illegible]

1[illegible]5[illegible]2[illegible]

-[illegible]

[illegible]

[illegible] 60-150cm[illegible]

Shovel options
round shovel, not perforated, anodized surface
30cm square shovel, not perforated, anodized surface
30cm square shovel, perforated, anodized surface
30cm square shovel, perforated, nonstick surface

Handle Length options
60cm
90cm
120cm
150cm

1.5mm thick aluminum alloy

Handle Details

Accordion
Design inspiration
Antiskid and beautiful

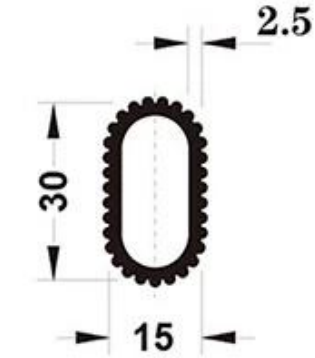

2.5mm thickened
aluminum material
stronger and more load-bearing capacity

Color options: bronze-coloured and silvery color for options

Length options: 60/90/120/150cm

a plastic hook at the end of handle for easier storage.

[illegible]

Tsingbuy[illegible]12[illegible]

[illegible]OEM&ODM[illegible]

[illegible]

[illegible]

Zoe Lee	TSINGBUY INDUSTRY LIMITED FACTORY PLANET OEM & ODM - Bakeware and Customization
Tel	+86 186 1186 6087 +86 0755-85234769
Email	marketing@tsingbuy.com
Skype	+86 186 1186 6087
Whatsapp	+86 186 1186 6087
Web	www.chinabakeware.com
ADD	2 Floor B1 Building,No 22 Dafu Industry park,Guanlan,Longhua District, Shenzhen, China 518110