□□□□□ 190/210/250/300/385/450 □□□□□□□□ □□□□□□□ □□□□□□□□ □□□ □□□ □□

190 / 210 / 250 / 300 / 385 / 450g□□□□□□□□□□□□□□□□□□□□□□□□□□□□□□□□□

1. □□1.0mm□ □□□□□□□□□ □ .

□ □□

3. □□□□□□□□□□□□□□□□□□□□□□□□□□□□□□□□□□□□□□ .

4. □□□□□□ □□□□□□□□□□□□□□□□.

5. □□

6. □□□□□□□□□□□□□□□□□□□□□□□□□□□□□□□□□□□□

7□ ODM & OEM □□□□□□□□□ □□□□□ □□□□□□□□□□ □□□□□□□□□□.

8. □□□□□ □□□□□□□□□□□□□ □□□□□□□□□ □□□□□□□□□□□□□□□□12 □□□□□□□□□□□□□□□□□□□□□ □□□□□□□□□□□□□□□□□□□□□□□□□□□□□

□□□□□ 190/210/250/300/385/450g □□□□□□□ □□□ □□ □□□ □□□□□ □□

190g non stick loaf pan

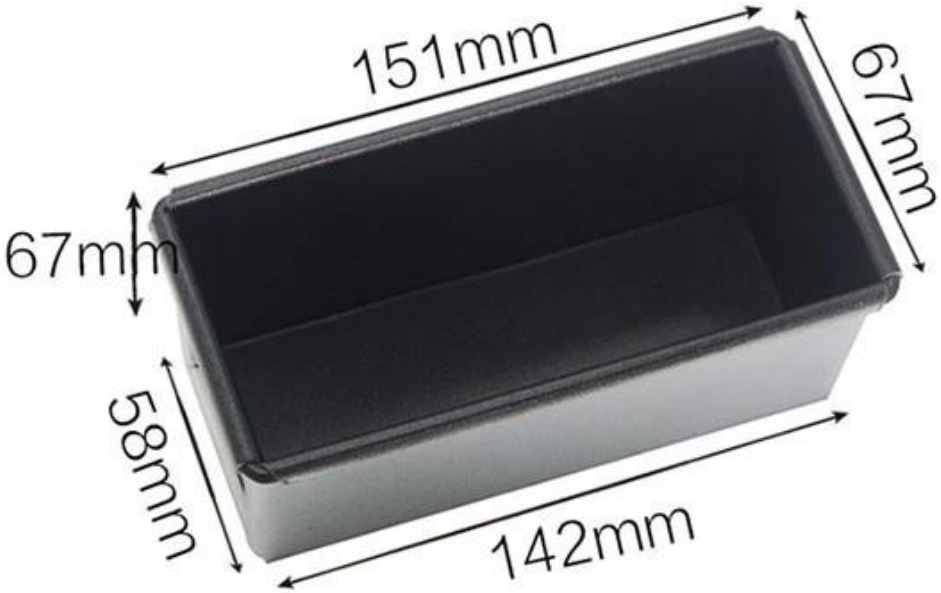

210g non stick loaf pan

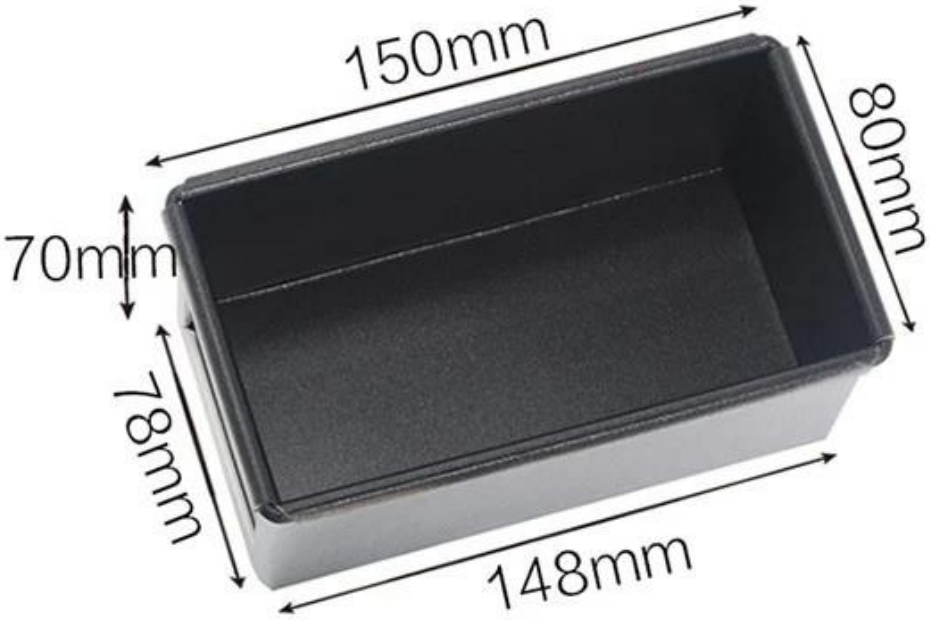

250g non stick loaf pan

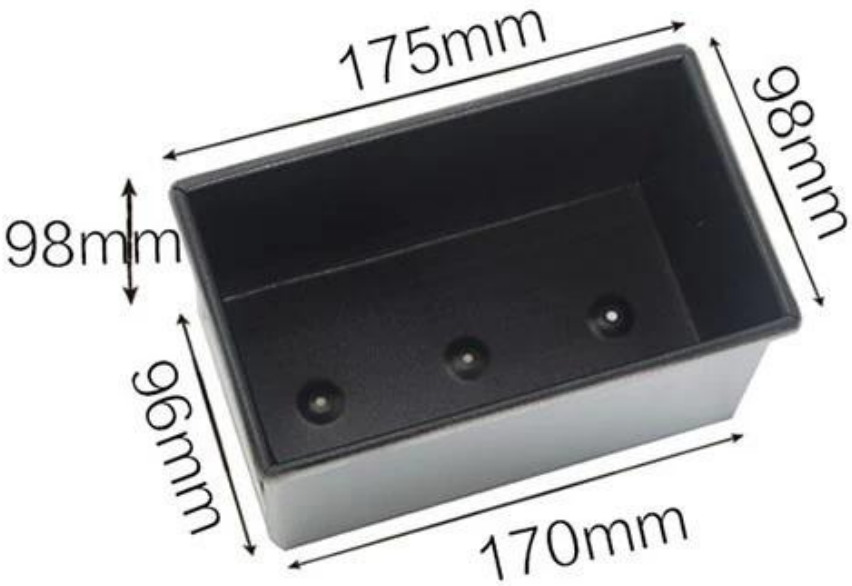

300g non stick loaf pan

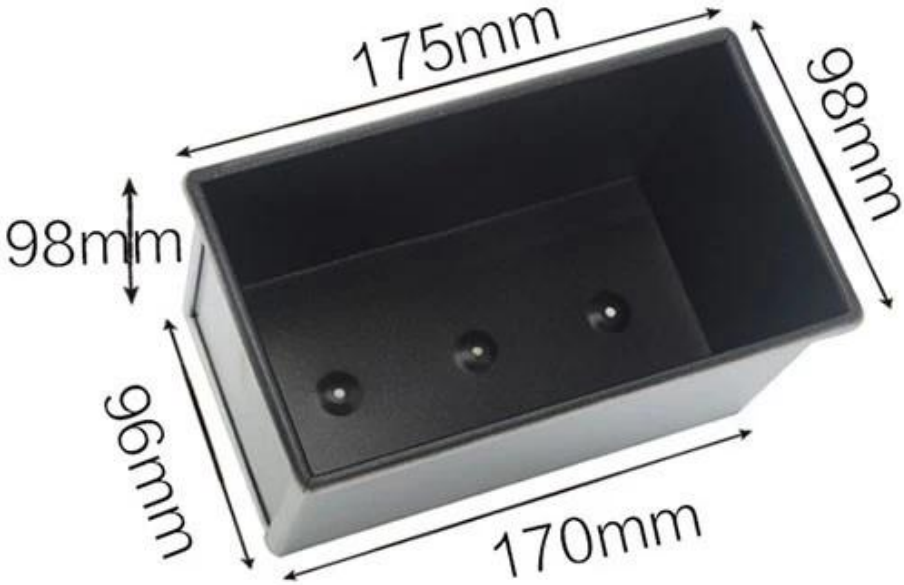

385g non stick loaf pan

450g non stick loaf pan

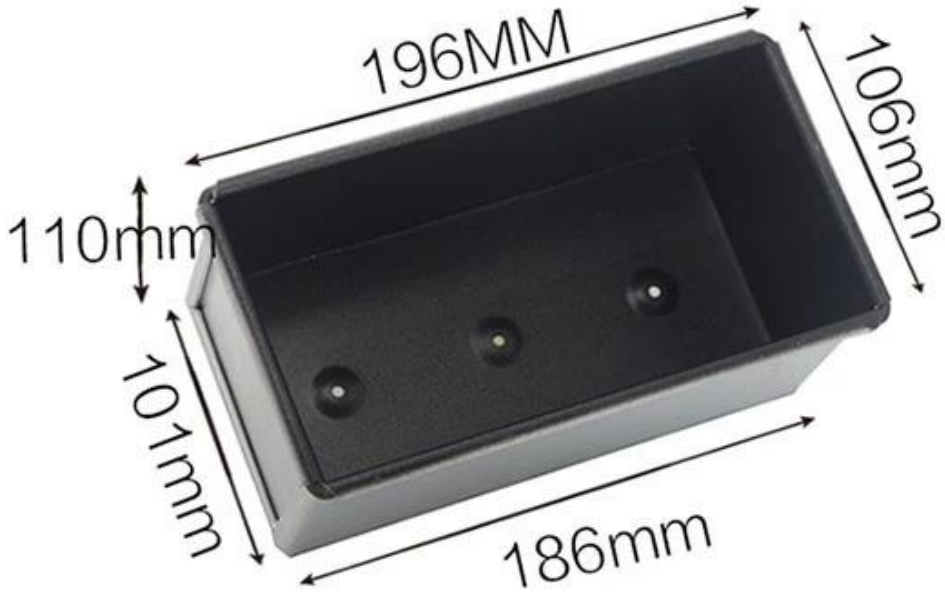

Cover for 250g loaf pan

Cover for 300g loaf pan

Cover for 450g loaf pan

□□□□□□□□ □□□□□□□□□□□□□□□□□□□□

□□□□□□□□□□□□□ □□ □□ □□□□.

□□□□□□□□ □□□ □□□□s □□□□□□□□□□□ □□□□□□□□□□□□□□□□□□ □□ □□□□□□□□□□□□□□□□□□□□□□□□□ □□□ □□□□

□□□□□□□□□: □□□□□□□□□□□□□□□□□□□□□□□□□

□□□□□□□□: □□□□□□□□□□□□□□

□□□□□□□□□□□□□□□□□□□□□□□□

□□□□□□□□: □□□□□□□□□□□□□□□□□□□ □□□□□ □□□□□□□□□□□□□□□□□□□□□□□□□

□□□: □□□□□□□

□□: □□□□□□□□□□□□□□□□□□□□□□□□□

customized single loaf pan

Teflon coating
Silicone coating
Material:
Aluminum alloy
Aluminized steel

[illegible] 1 [illegible]

[illegible]12[illegible]

More Customzied Strap Loaf Pans from Tsingbuy

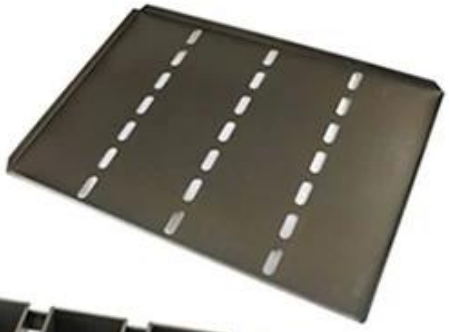

Customized shape

Customized size

Rack matched

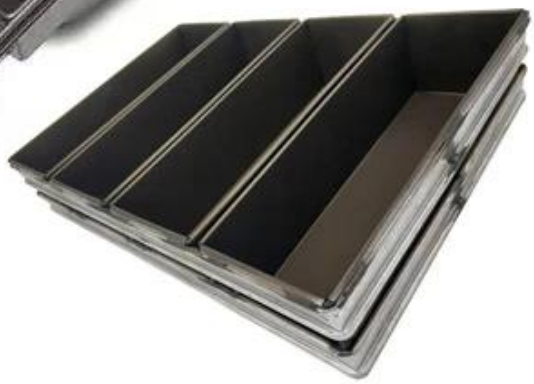

Customized Single Loaf Pan

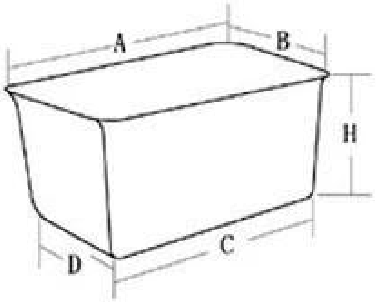

A.Top length of the item
B.Top width of the item
C.Bottom length of the item
D.Bottom width of the item
H.Height

Customized Strapped Loaf Pan Sets

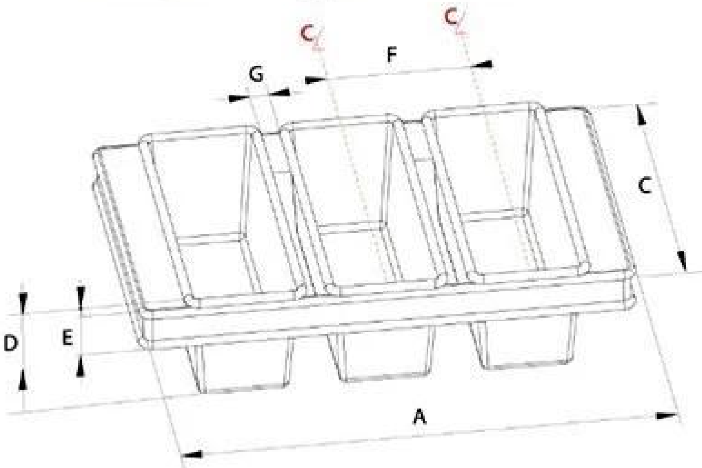

A.Overall Length
C.Overall Width
D.Depth
E.Frame Height
F.Center-to-center
G.Pan Distance

Flat handle

Frame handle

no handle

Matching lid (Drop Style)

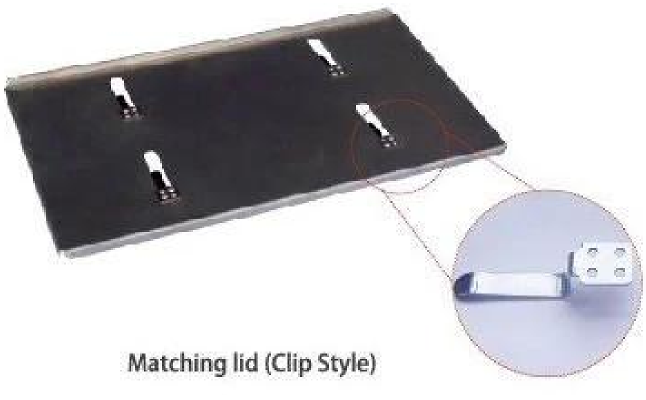

Matching lid (Clip Style)

□□□□

□□□□ □□□□□□□□□□□□□□□□ □□□ **ODM&OEM** □□□□□□□□□□□□□□□□□□□□□□□ □□□□□□□□□□□□□□□□□□□□□□□□□□□□□□□□□□□

Loaf Pan

Tsingbuy Industry Limited

TSINGBUY | 天仕迈