□□□□

One Piece Integrated Molding Bread Loaf Pan with Lid

Integrated Molding Aluminum Non Stick Bread Loaf Pan with Lid

Holes at Bottom for Ventilation

ABLE AND EASY TO DEA

Enjoy Your DIY with Family

Curled Edges for Four Sides
Easy to Sliding-on-off cover

Double-side Non Stick Coated Bread Loaf Pan with Lid

450g dough

baking pan weight: 309g

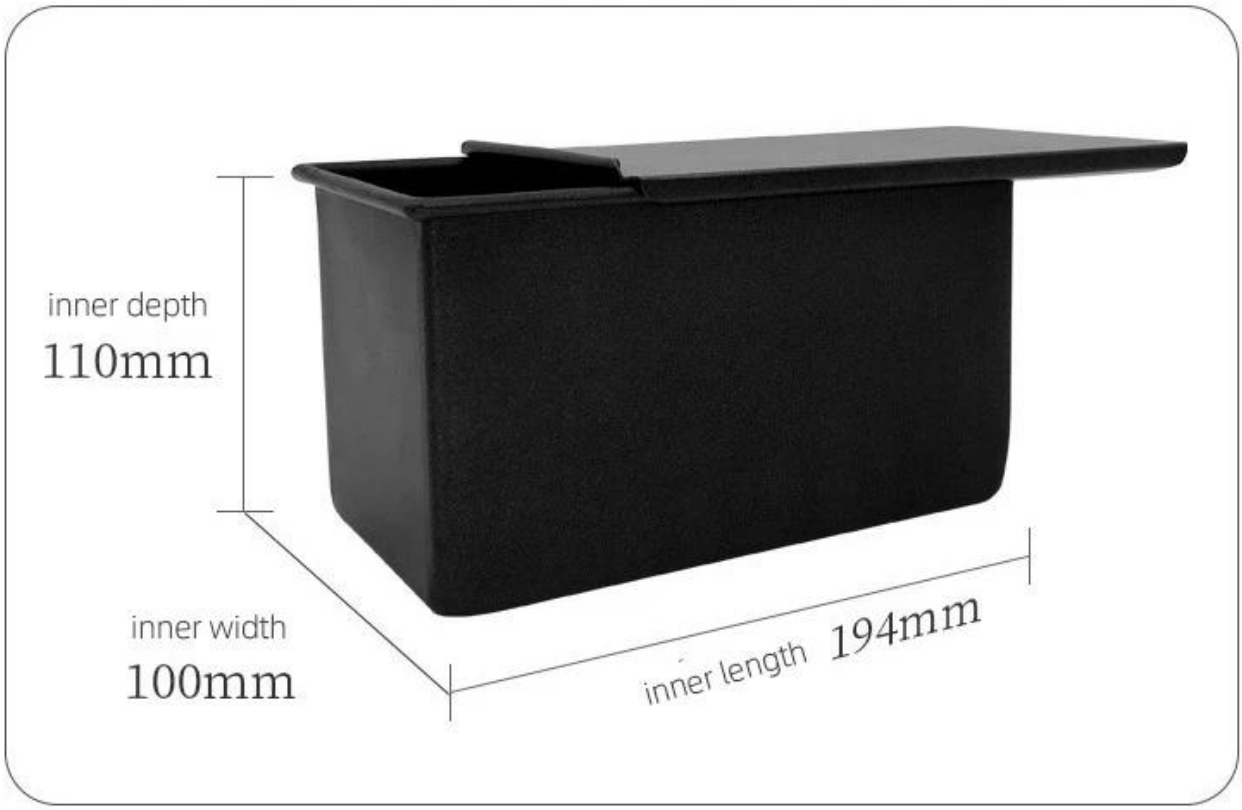

□□□□□□□ □□□□□□□□□□□□□□

□□□□□□□□□□□□□□□□□□□□□□

□□□□□□□□□□□□□□□□□□□

customized single loaf pan

Teflon coating
Silicone coating
Material:
Aluminum alloy
Aluminized steel

□□□□ □□□□□□□□□□□□ □□□□□□□□□□□□

More Customzied Strap Loaf Pans from Tsingbuy

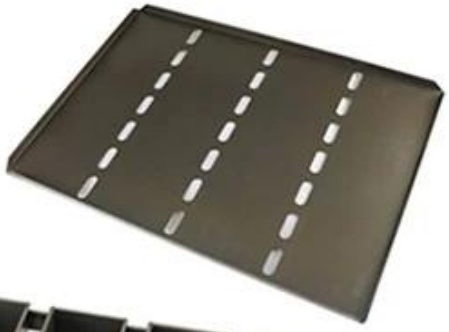

Customized shape

Customized size

Rack matched

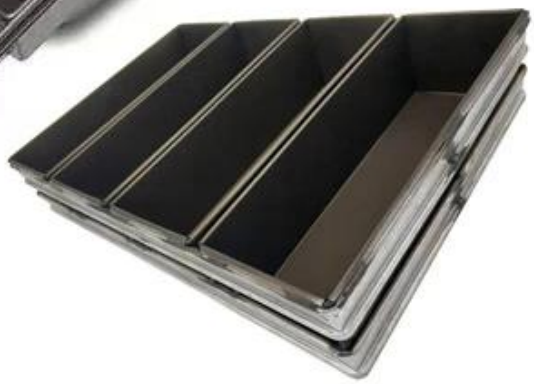

Customized Single Loaf Pan

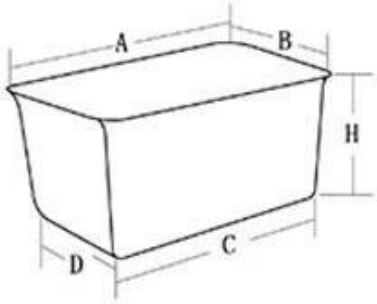

A.Top length of the item
B.Top width of the item
C.Bottom length of the item
D.Bottom width of the item
H.Height

Customized Strapped Loaf Pan Sets

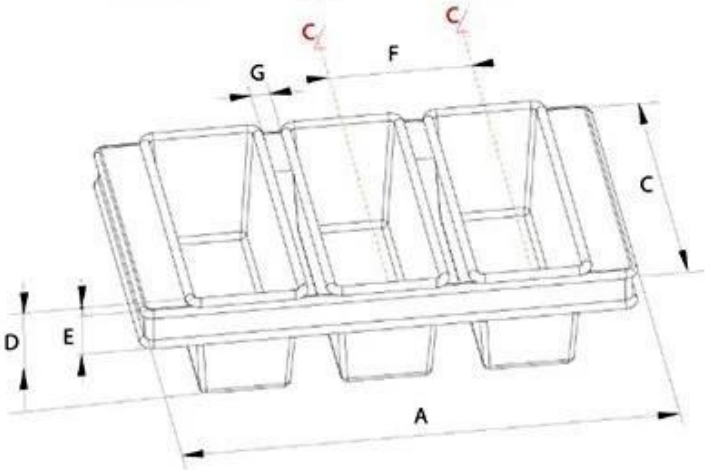

A.Overall Length
C.Overall Width
D.Depth
E.Frame Height
F.Center-to-center
G.Pan Distance

Flat handle

Frame handle

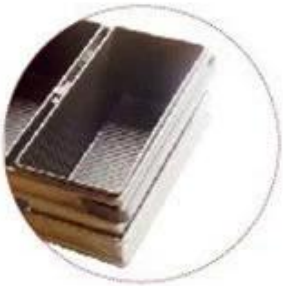

no handle

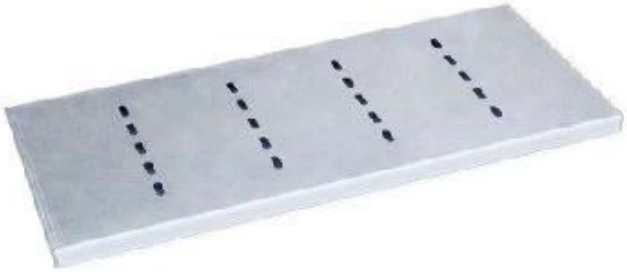

Matching lid (Drop Style)

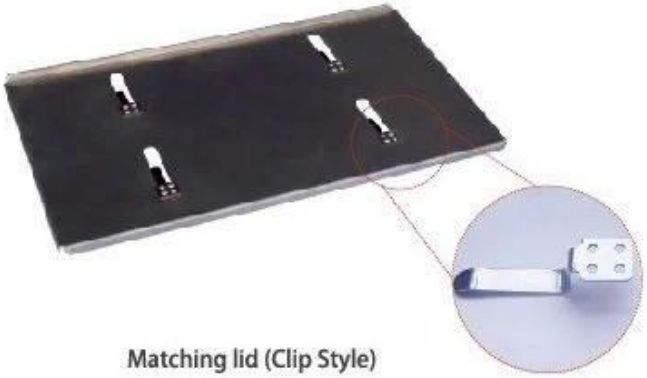

Matching lid (Clip Style)

□□□□
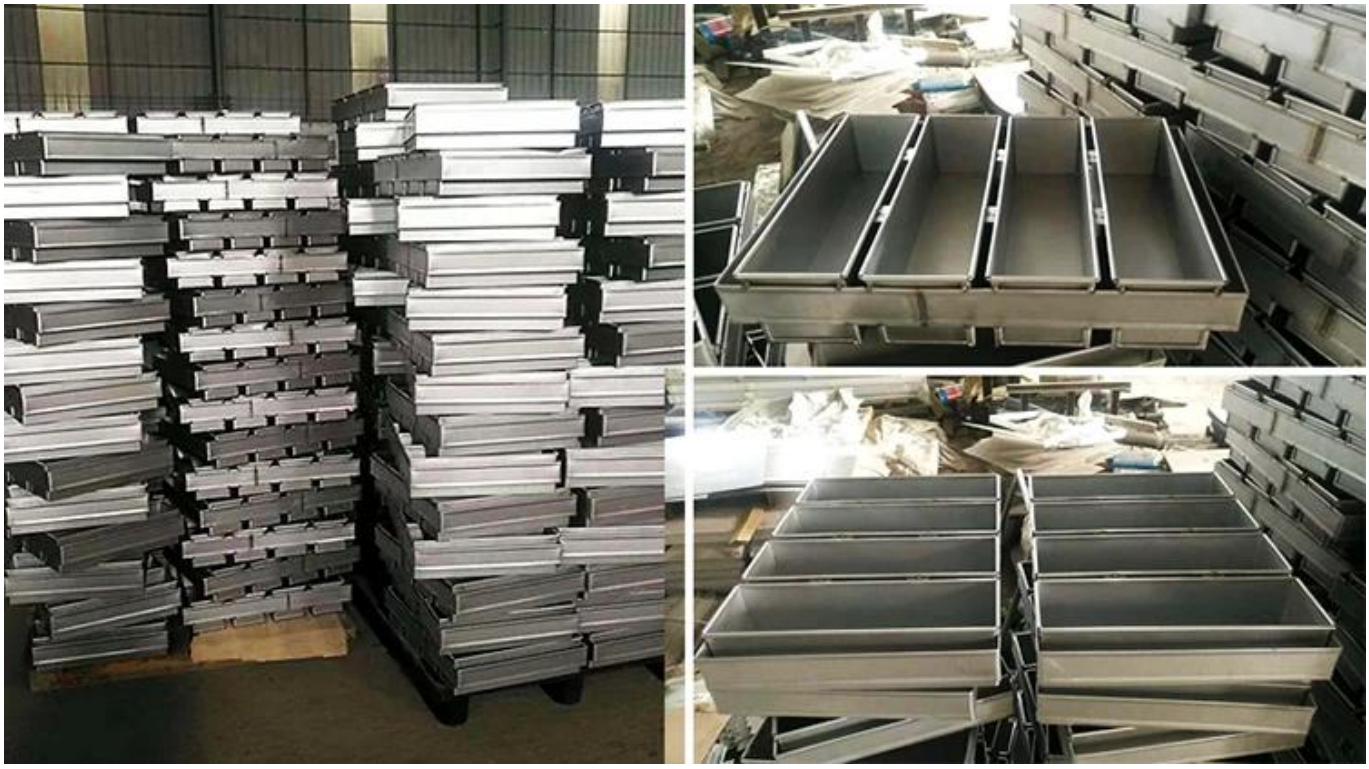
□□□□□□□□□Tsingbuy □□□□□□□□□□ □□□□□□□□□□