[illegible]

[illegible]

1.[illegible]1.0mm[illegible]

2.[illegible]

3. [illegible]

4.[illegible]

5.[illegible]

6.[illegible]

7. ODM & OEM [illegible] [illegible].

8. Tsingbuy[illegible]12[illegible].

[illegible]

Aluminum Mini Loaf Pan with Lid

1.0mm aluminum
top 85x85x73mm
bottom 58x58mm

0.7/0.8mm alusteel
top 140x140x120mm
bottom 75x75mm

Gold color non stick
1.0mm aluminum
top 85x85x73mm
bottom 58x58mm

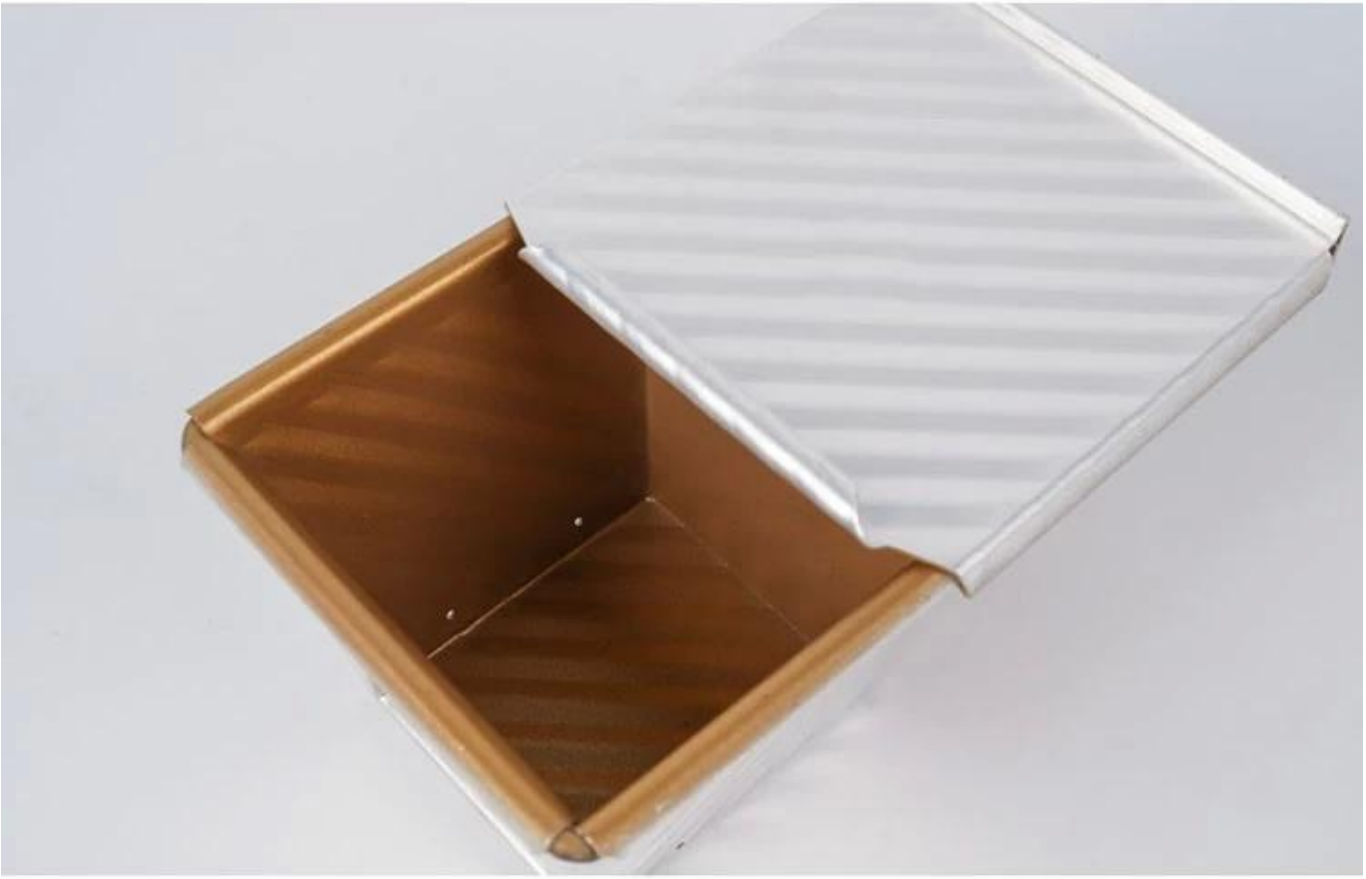

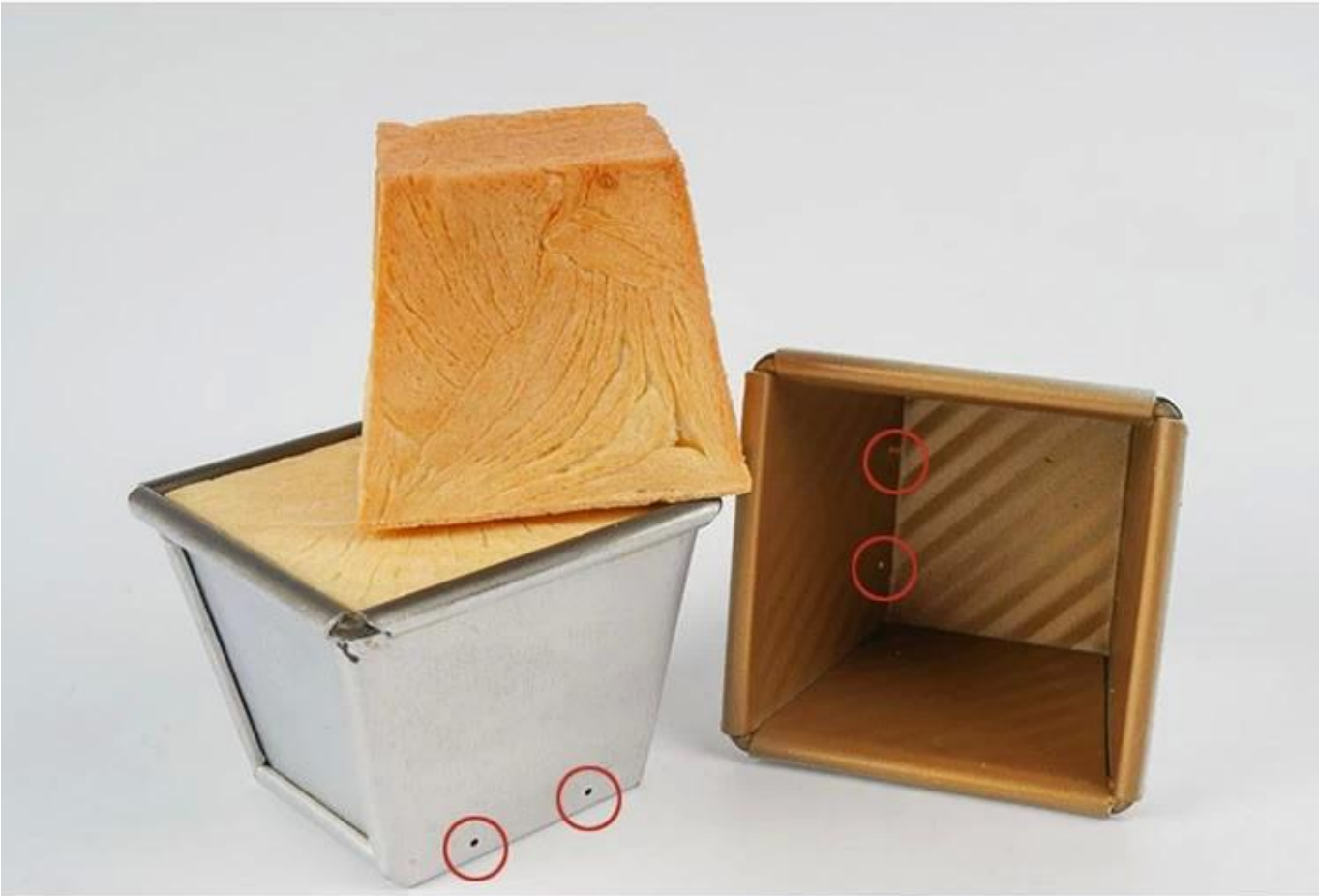

8.5cm
7.3cm
5.8cm

[illegible]

[illegible]

[illegible]

[illegible]: [illegible]

[illegible]: [illegible]

[illegible]

[illegible]: [illegible]

[illegible]: [illegible]

[illegible]: [illegible]

customized single loaf pan

Teflon coating
Silicone coating
Material:
Aluminum alloy
Aluminized steel

[illegible] [illegible] [illegible] 1 [illegible].

[illegible] 12 [illegible]. [illegible]

More Customzied Strap Loaf Pans from Tsingbuy

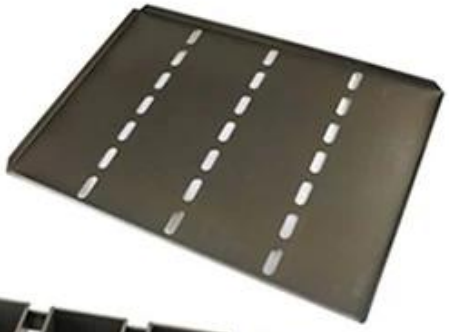

Customized shape

Customized size

Rack matched

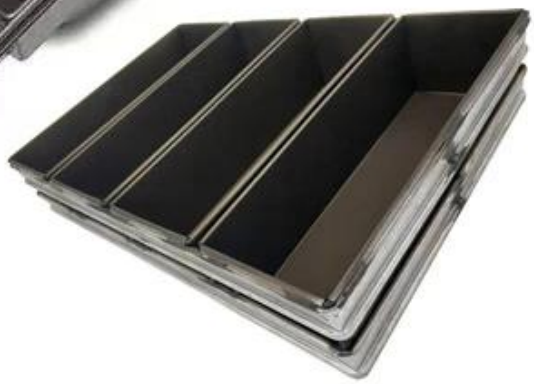

Customized Single Loaf Pan

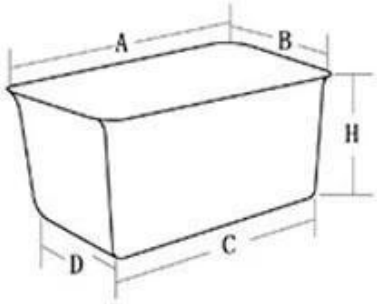

A.Top length of the item
B.Top width of the item
C.Bottom length of the item
D.Bottom width of the item
H.Height

Customized Strapped Loaf Pan Sets

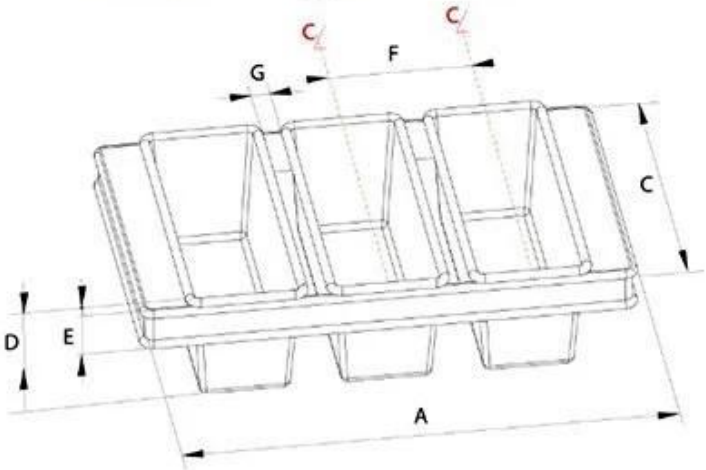

A.Overall Length
C.Overall Width
D.Depth
E.Frame Height
F.Center-to-center
G.Pan Distance

Flat handle

Frame handle

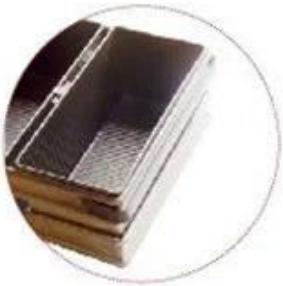

no handle

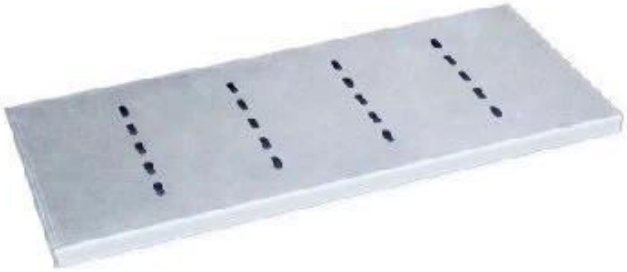

Matching lid (Drop Style)

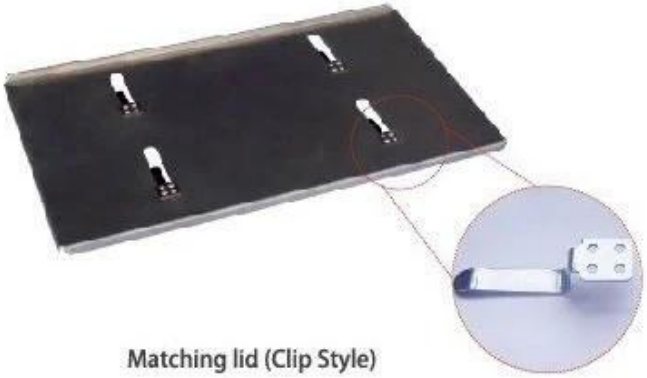

Matching lid (Clip Style)

[illegible]
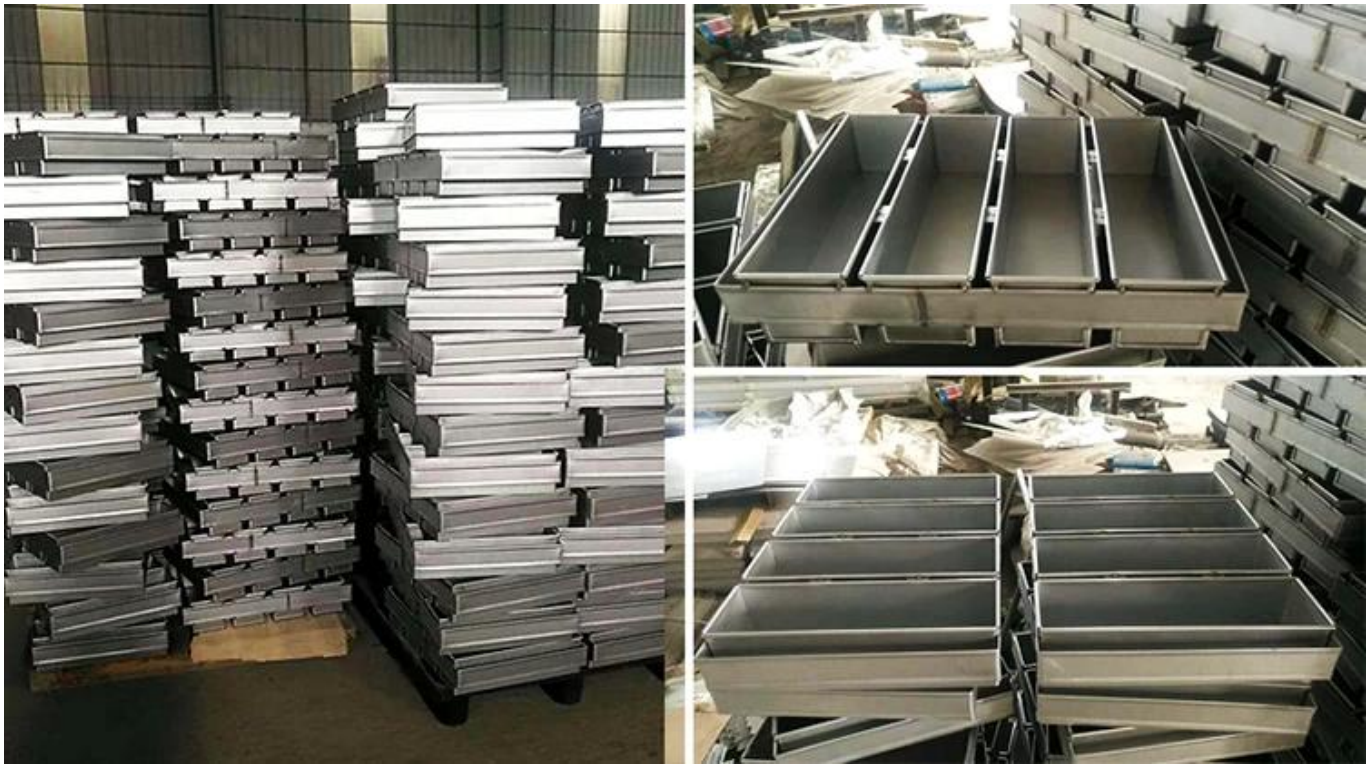
Tsingbuy [illegible] [illegible] ODM&OEM [illegible]