□□□□

Customized Single Loaf Pan

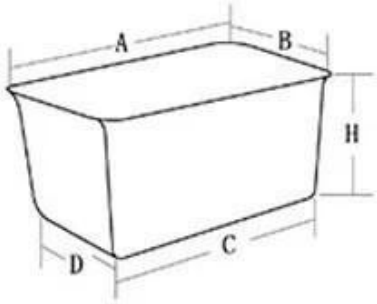

A.Top length of the item
B.Top width of the item
C.Bottom length of the item
D.Bottom width of the item
H.Height

Customized Strapped Loaf Pan Sets

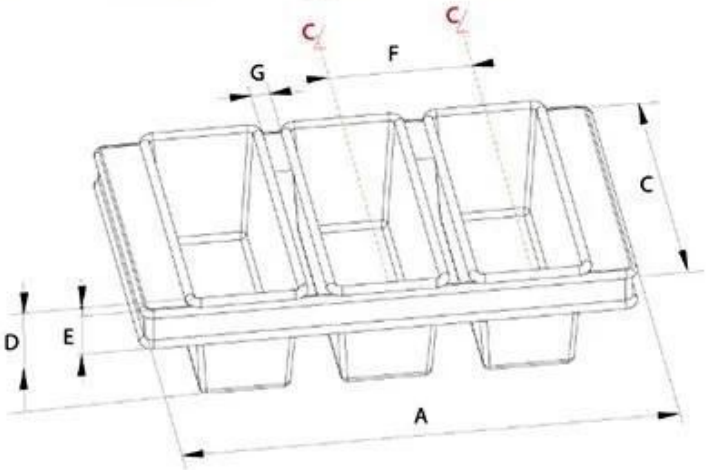

A.Overall Length
C.Overall Width
D.Depth
E.Frame Height
F.Center-to-center
G.Pan Distance

Flat handle

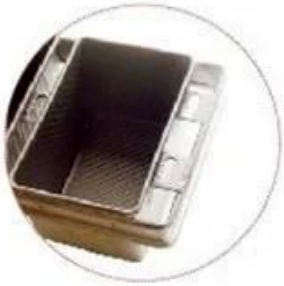

Frame handle

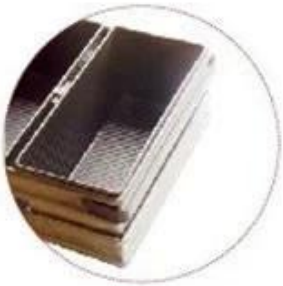

no handle

Matching lid (Drop Style)

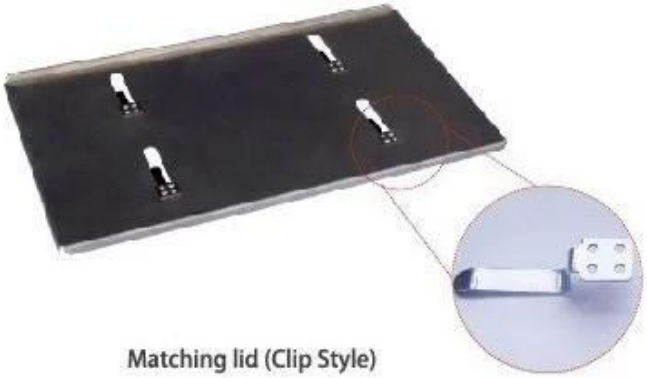

Matching lid (Clip Style)

Customized shape

Customized size

Rack matched

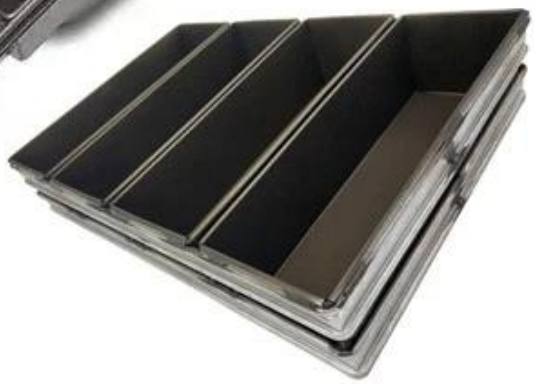

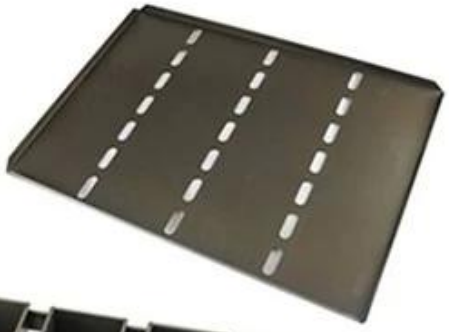

Procedures for custom made loaf baking pans

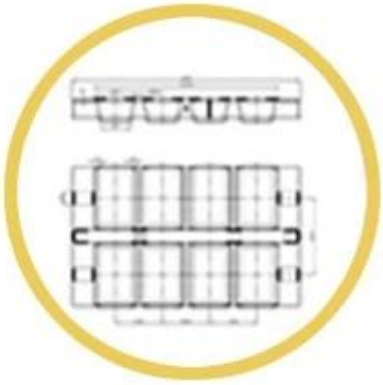

1. DRAWING

2.DESIGN

3.PRODUCT

4.PACKING

5.LOADING

6.SHIPPING

Custom Made Strap Loaf Pan Used with Bakery Trolley

□□□

Single Loaf Pan

natural surface

corrugated

full perforation

nonstick

corrugated

golden color

holes at bottom

full perforation

custom size

Tsingbuy

Tsingbuy□□□□□□□□□□□□□□□□□□□□□□□□□□□□
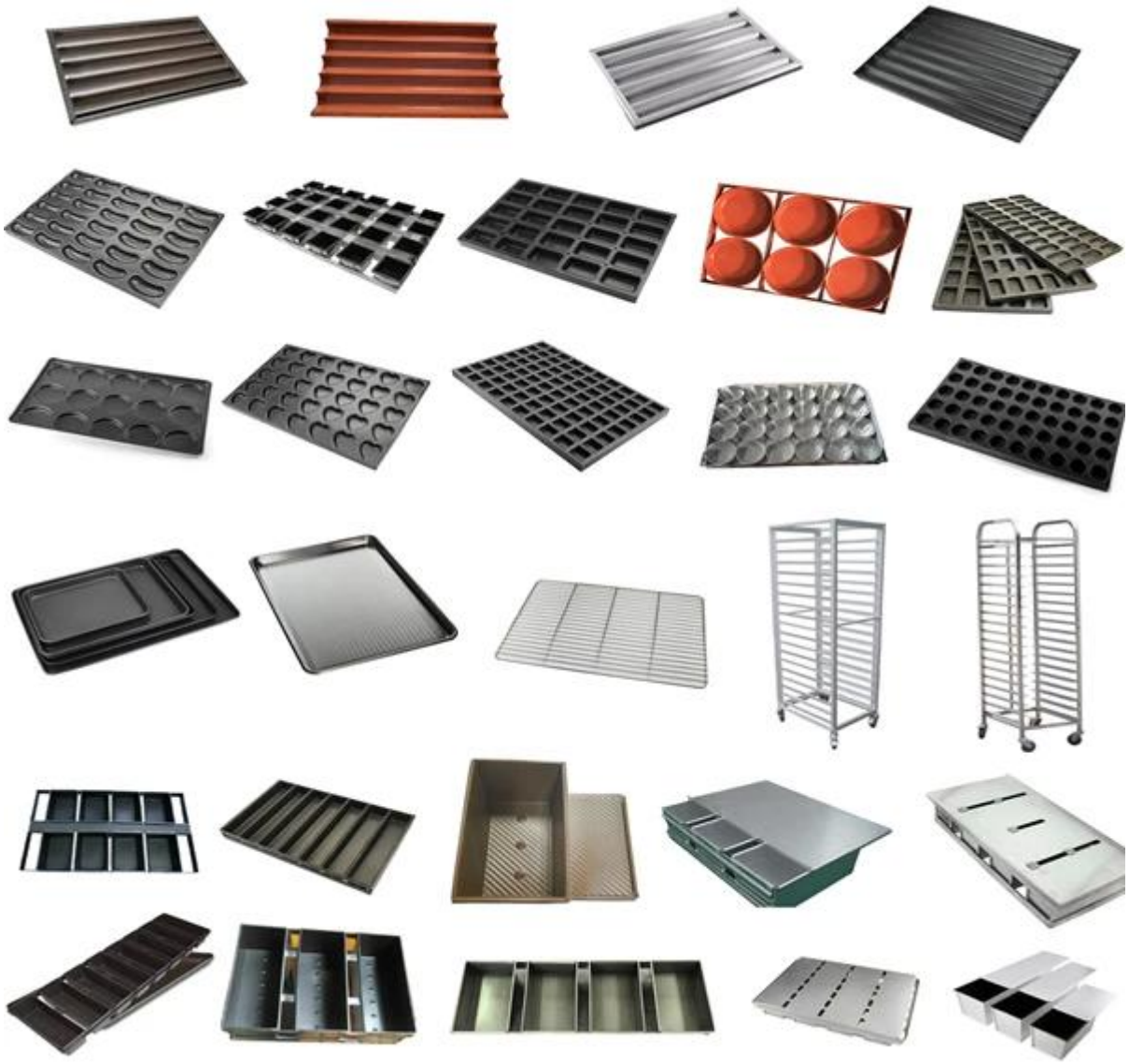
□□□ □□□□□□□□Tsingbuy □□□□□□ □□□□□□□□□□□□□□□□□□□□□□□□ □□□□□□□□□□□□□□□□□