□□□□□□□□□□□□□□□□□ 6/8/11 □□□

□□□□□ □□ □□□ □□□ □□□□□□□□□□

-.

- □□□□□□□□□□□□□□□□□□□□□□□□□□□

- □□ □□□□□□□□□□□□□□□□□ □□□□□□□□□□□□□□□

- □□□□□□□□□□□□□□□□□□□□□□□□□□□□□□□□ □□ □□. □□□□□□□□□□□□

- □□□□□□Tsingbuy □□ □□□ □□□ □□□□□□□□□□□□□□□□□□□□□□□□□□□□□

□□□□□ □□ □□□ □□□ □□□□□□□□□□

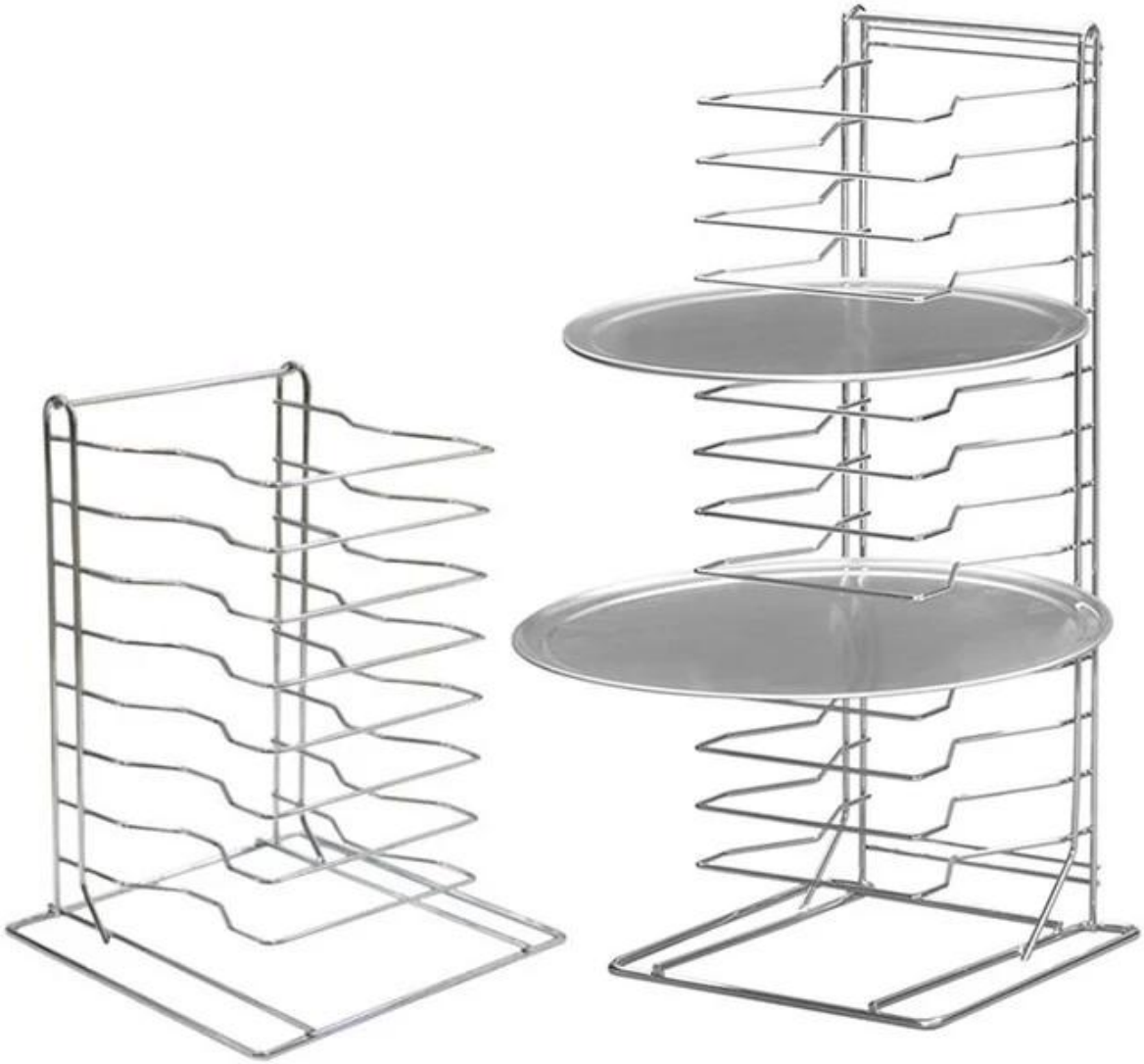

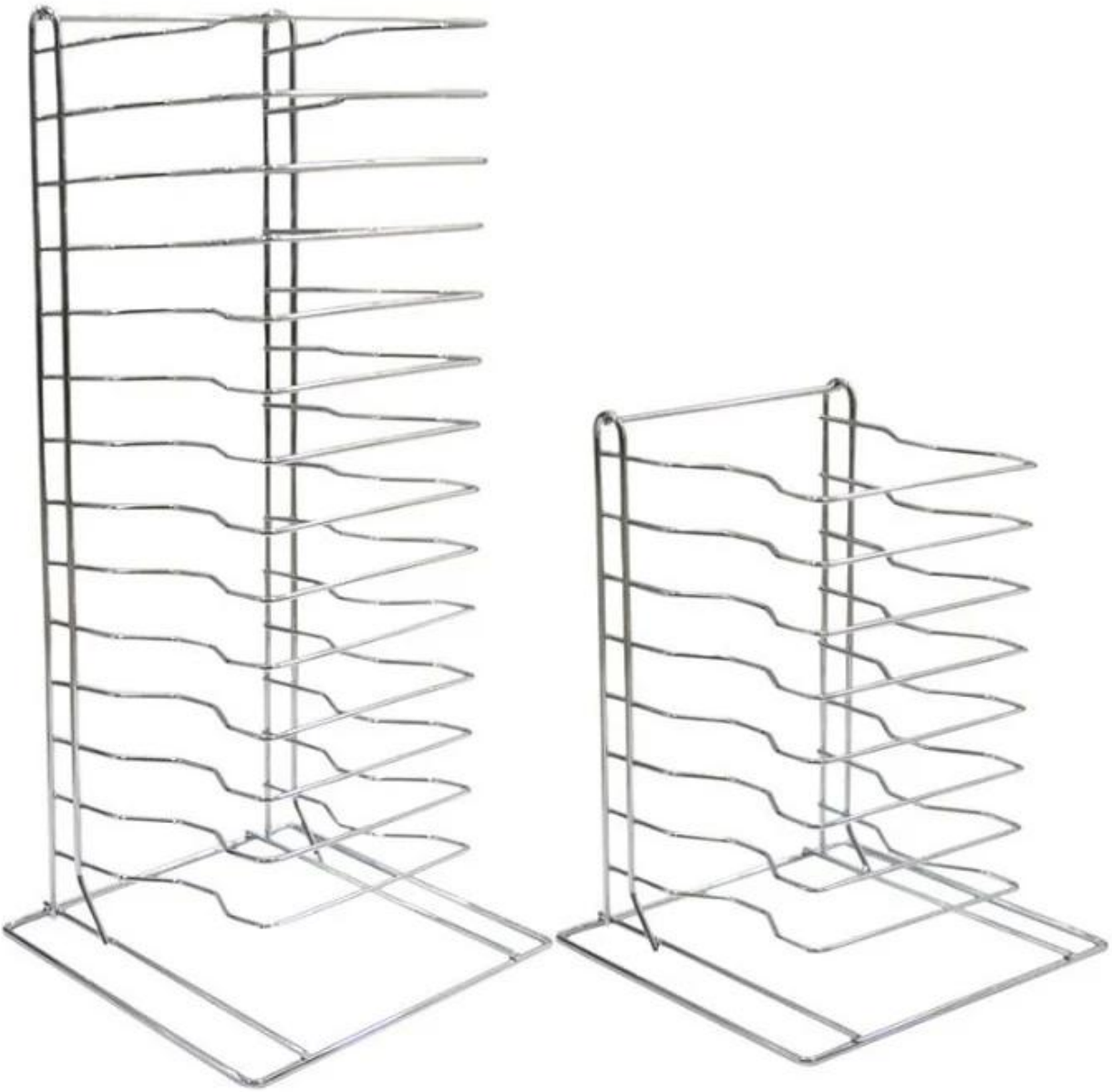

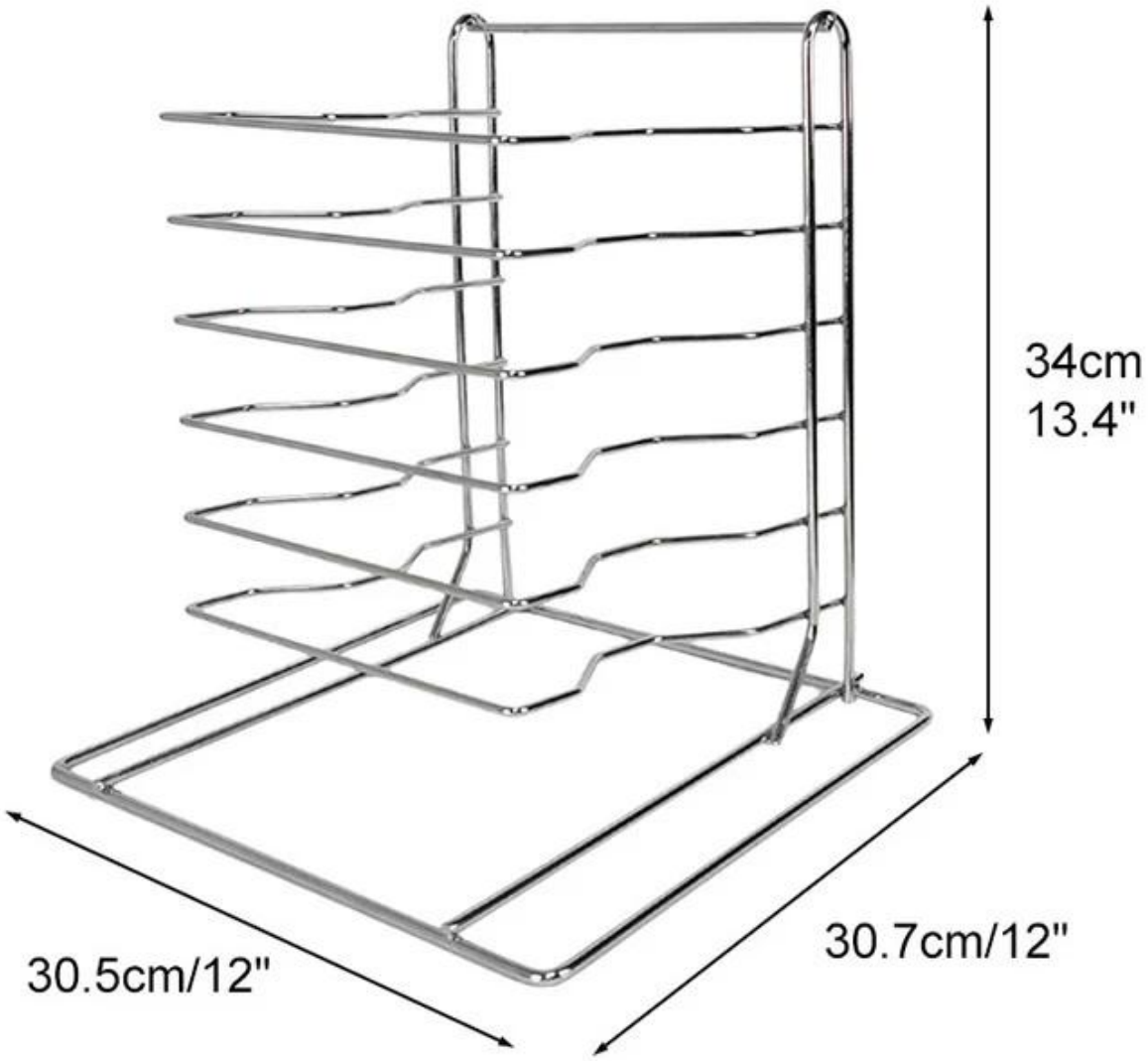
34cm
13.4"
30.5cm/12"
30.7cm/12"

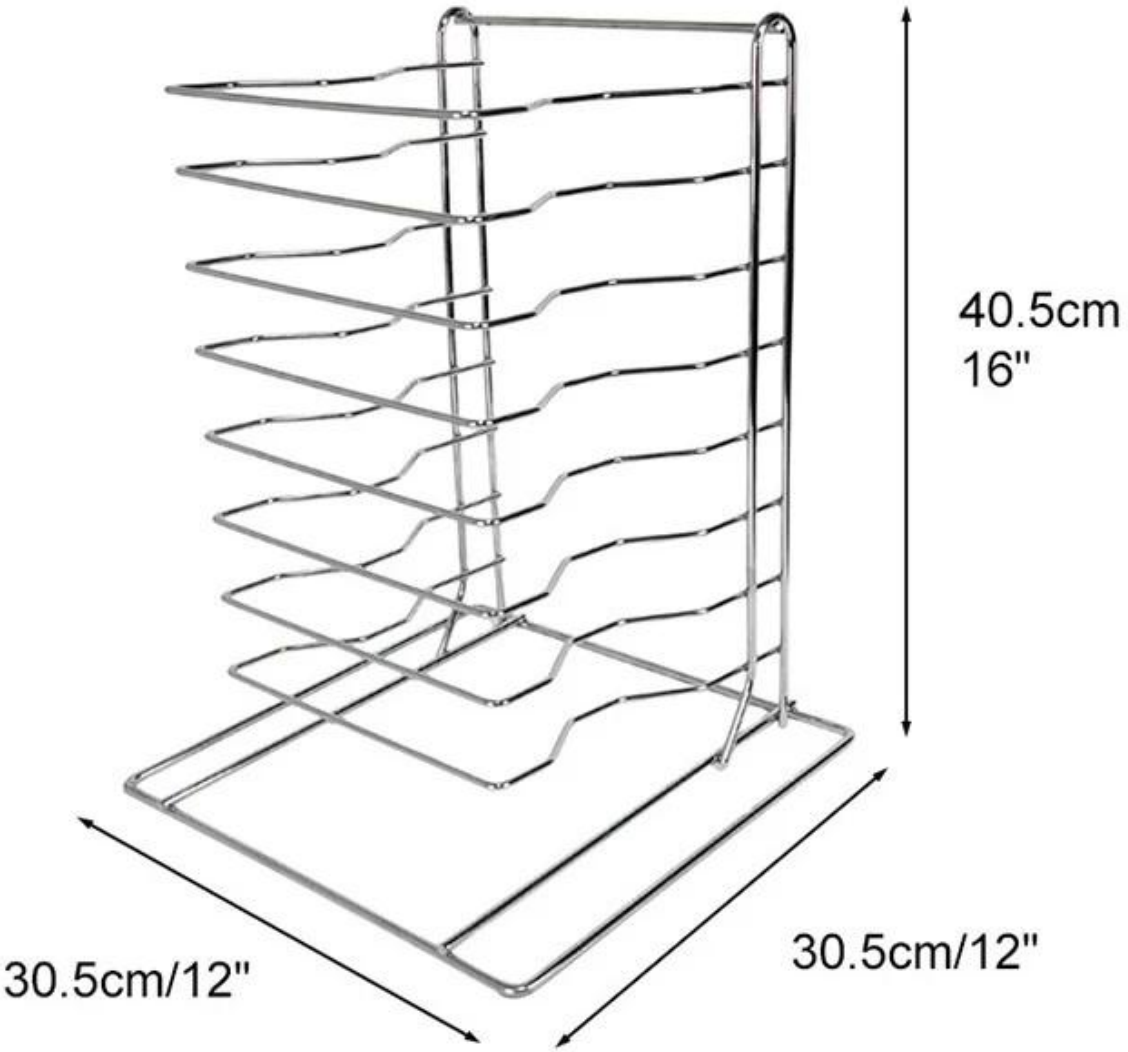
40.5cm
16"
30.5cm/12"
30.5cm/12"

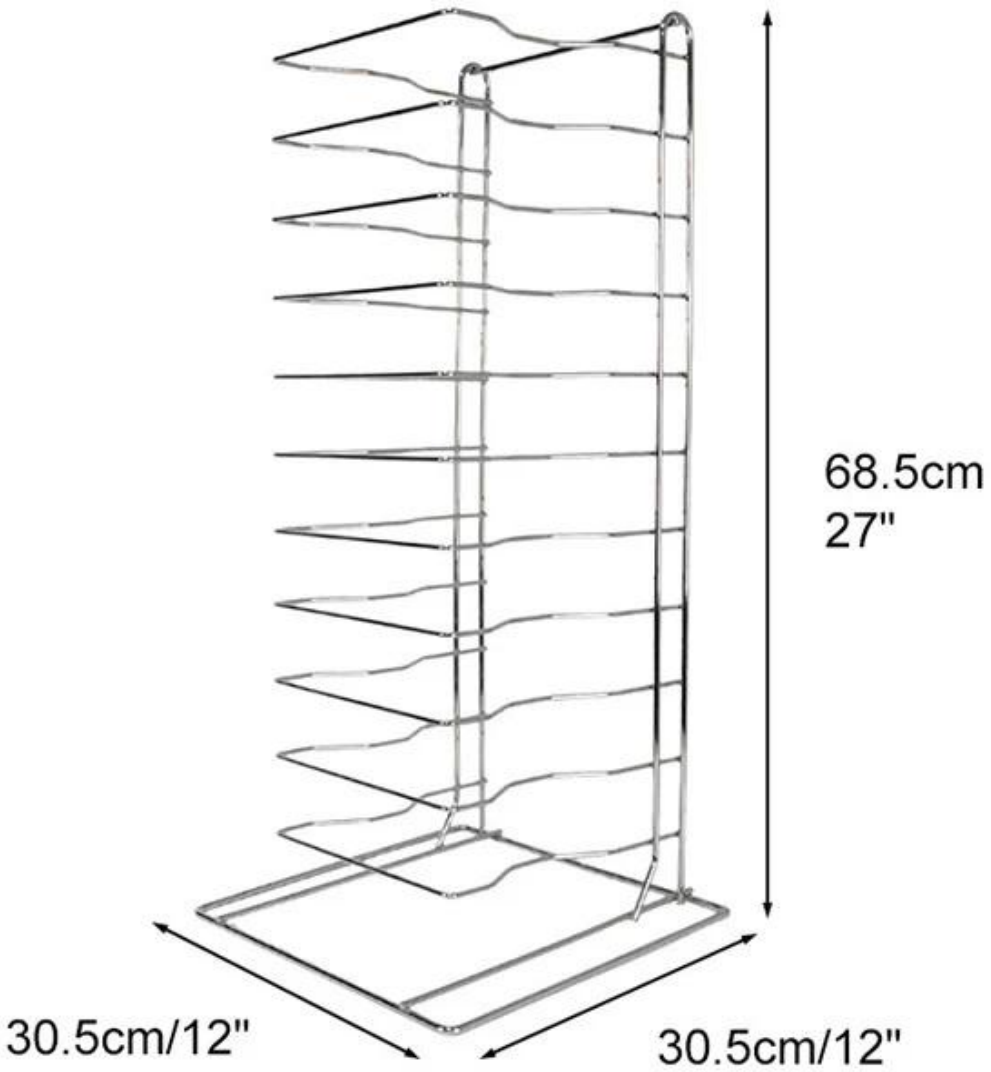
68.5cm
27"
30.5cm/12"
30.5cm/12"

Tsingbuy □□□□□□□□□□

□□□

□□□□□□□□□□□□ □□□□□□□□□□□□□□□□□□□□□□□□□□ □□□□□□□□□□□□ □□□ □□□ □□□□□□□□□□□□□□□□

Tsingbuy Bakery Trolley custom baking pans

Use in Food Factory

[illegible]

Tsingbuy Industry Limited [illegible] 12 [illegible] pizza [illegible]

[illegible] OEM [illegible] ODM [illegible]

[illegible] [illegible]

MAIN PRODUCT

- Industry cup tray

- Baguette tray

- Sheet pan

- Bakery Trolley

- Bread pan set