[illegible] 450/600/750/900/1000/1200 [illegible]

[illegible]

1.[illegible] PTFe[illegible]

2.[illegible] a [illegible] 1.0 [illegible]

3.[illegible] e [illegible] l[illegible]

4. [illegible]：[illegible]q [illegible]

5. [illegible]：[illegible] Tsingbuy[illegible] [illegible].

[illegible]

Nonstick Aluminum
Pullman Loaf Pan

Black Nonstick Loaf Pan with Smooth Surface

Product Specifications

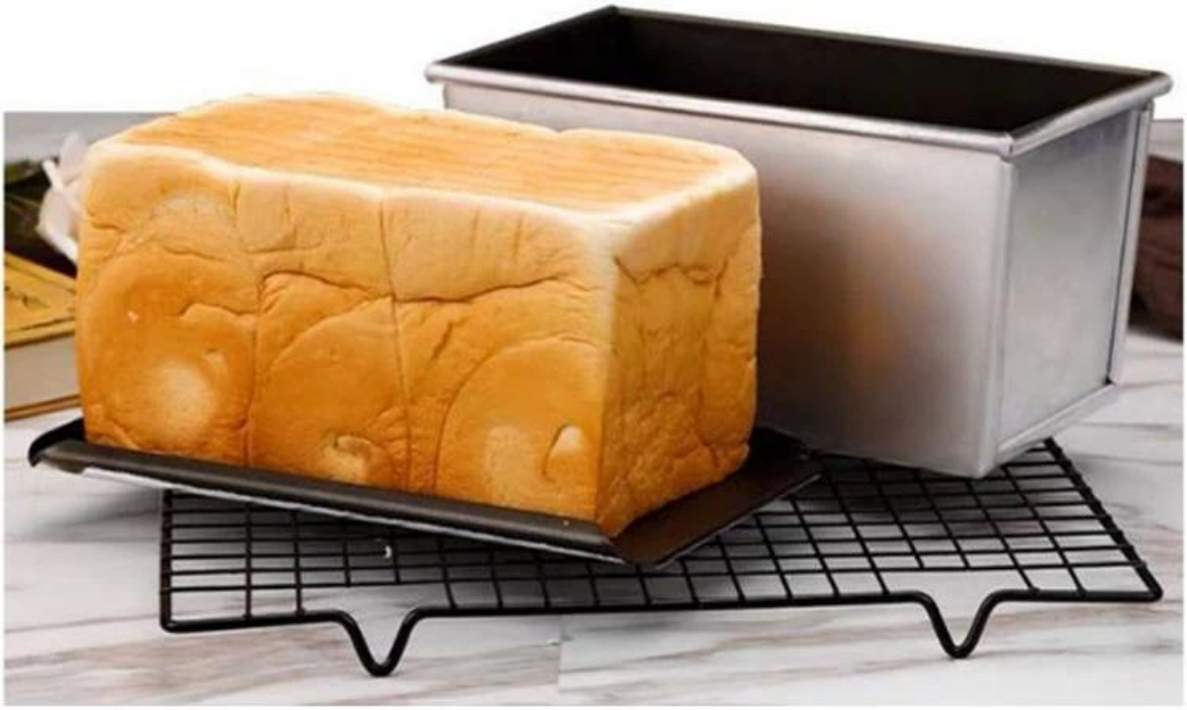

weight	Length	width	height	function
450g	21.0cm	12.0cm	11.0cm	bakery
600g	32.0cm	10.5cm	10.8cm	bakery
750g	33.0cm	11.2cm	11.6cm	bakery
900g	34.0cm	11.8cm	12.0cm	bakery
1000g	34.0cm	13.5cm	12.0cm	bakery
1200g	38.0cm	13.3cm	12.5cm	bakery

High Quality

Aluminum Alloy

Food Grade

Nonstick Coating

Exquisite Workmanship

rolled edge design

Holes for aire flow

[illegible]

[illegible]

[illegible]

[illegible]: [illegible]

[illegible]: [illegible]

[illegible]

[illegible]: [illegible]

[illegible]: [illegible]

[illegible]: [illegible]

customized single loaf pan

Teflon coating
Silicone coating
Material:
Aluminum alloy
Aluminized steel

[illegible] ODM&OEM [illegible] 1 [illegible]

[illegible]12[illegible].[illegible]

More Customzied Strap Loaf Pans from Tsingbuy

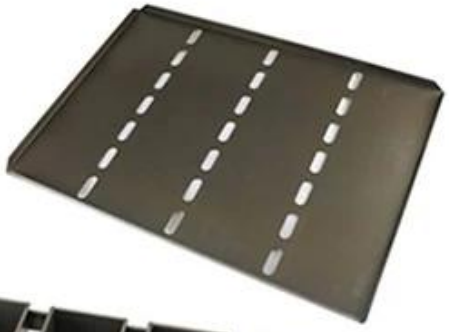

Customized shape

Customized size

Rack matched

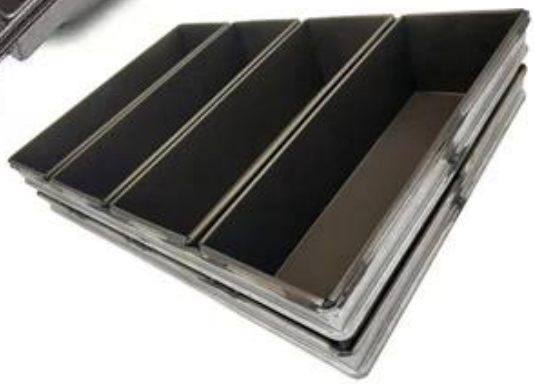

Customized Single Loaf Pan

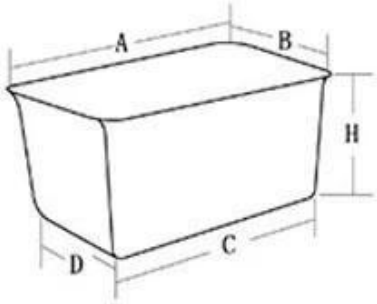

A.Top length of the item
B.Top width of the item
C.Bottom length of the item
D.Bottom width of the item
H.Height

Customized Strapped Loaf Pan Sets

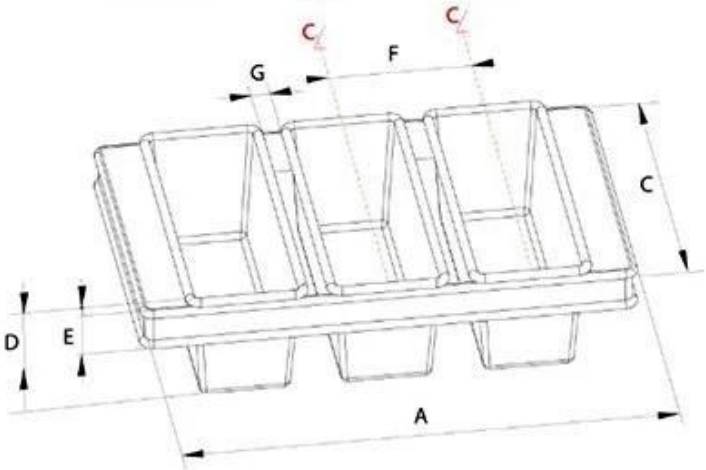

A.Overall Length
C.Overall Width
D.Depth
E.Frame Height
F.Center-to-center
G.Pan Distance

Flat handle

Frame handle

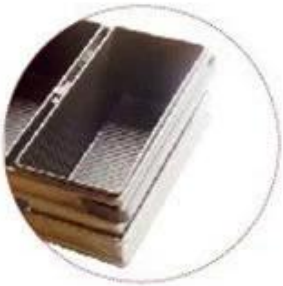

no handle

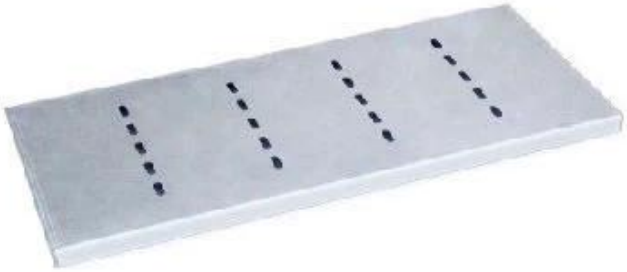

Matching lid (Drop Style)

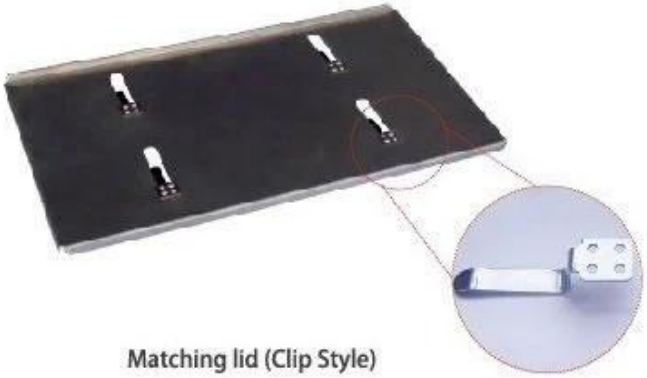

Matching lid (Clip Style)

[illegible]
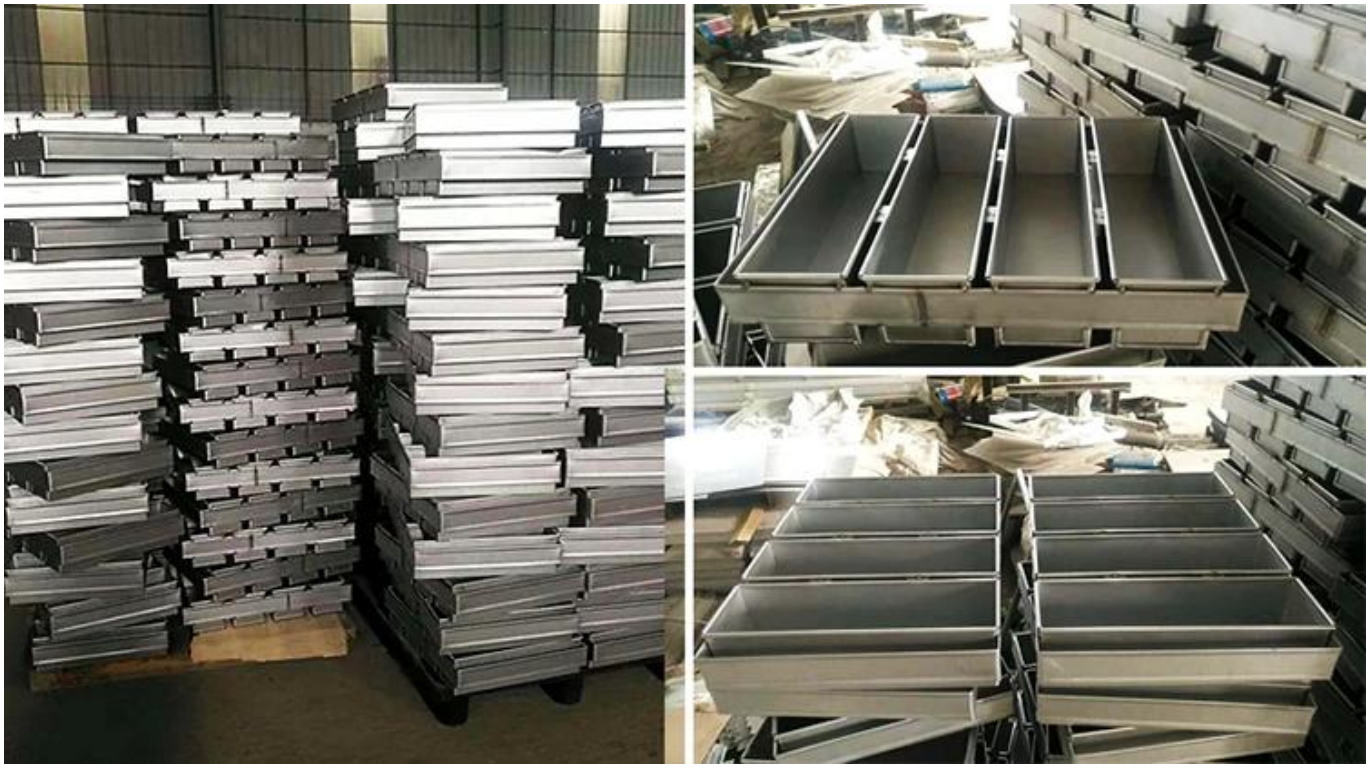
Tsingbuy [illegible] [illegible]
[illegible] ODM&OEM [illegible]