□□□□□□□□□□□□□□□□□□

□□□□□□-□□□□□□□□□□

- □□□□□□□□□□□

- □□□□□□□□□□□□□□□□□□

4.[illegible]

[illegible]

□□□□□□□□

Customized Single Loaf Pan

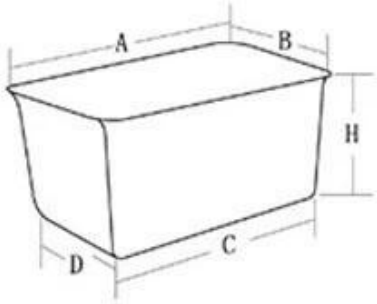

A.Top length of the item
B.Top width of the item
C.Bottom length of the item
D.Bottom width of the item
H.Height

Customized Strapped Loaf Pan Sets

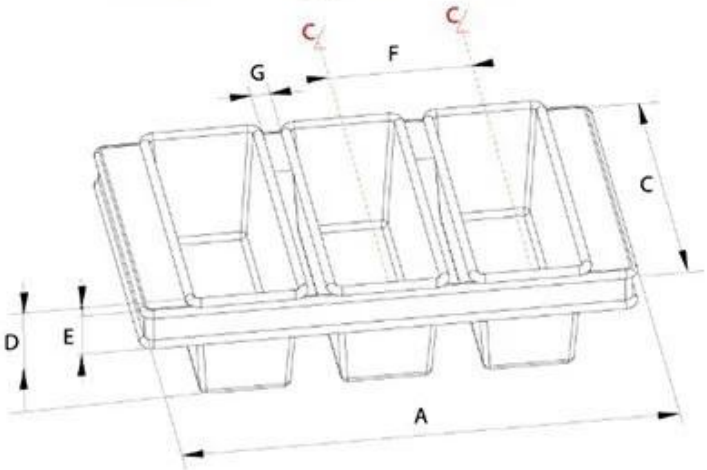

A.Overall Length
C.Overall Width
D.Depth
E.Frame Height
F.Center-to-center
G.Pan Distance

Flat handle

Frame handle

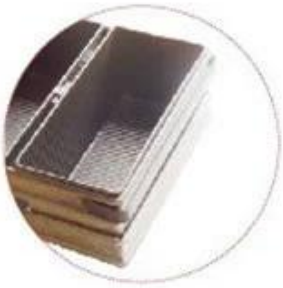

no handle

Matching lid (Drop Style)

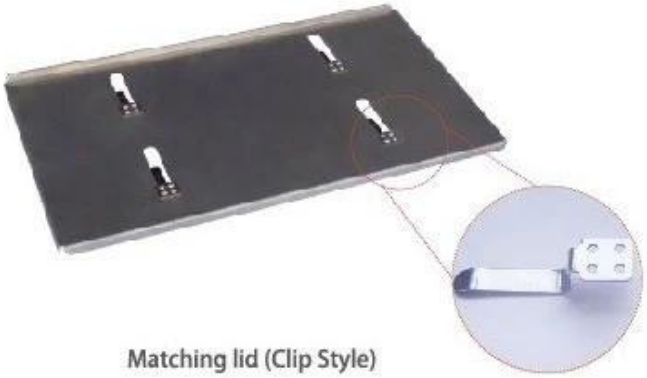

Matching lid (Clip Style)

□□□□□□□□□□□

Teflon coating

Silicone coating

Material:

Aluminum alloy

Aluminized steel

□□□□□□□/□□□□□□□

With lid&without lid

Customized shape

Customized size

Rack matched

□□□□□□□□□□□□□□□

Leading manufacturer of industrial&custom made bakeware in China

Tsingbuy Industry Limited has been becoming one of the leading manufactures in commercial and home bakeware industry in China,we have more than 10 years foucusing on research, development and manufacture of bakeware,our products mainly cover sheet pan,multi-mould pan,baguette tray,cake pan,industrial bread pan,pizza pan and other bakeware.

□□□□□□□□□□□□□□□□□

□□□□□□□□□□□□□□□□□□□□

[illegible]

Tsingbuy[illegible] [illegible] [illegible]OEM[illegible]OEM[illegible]12[illegible]banneton[illegible]PP[illegible]couche[illegible]

[illegible]

Zoe Lee	TSINGBUY INDUSTRY LIMITED FACTORY PLANET OEM & ODM - Bakeware and Customization
Tel	+86 186 1186 6087 +86 0755-85234769
Email	marketing@tsingbuy.com
Skype	+86 186 1186 6087
Whatsapp	+86 186 1186 6087
Web	www.chinabakeware.com
ADD	2 Floor B1 Building,No 22 Dafu Industry park,Guanlan,Longhua District, Shenzhen, China 518110
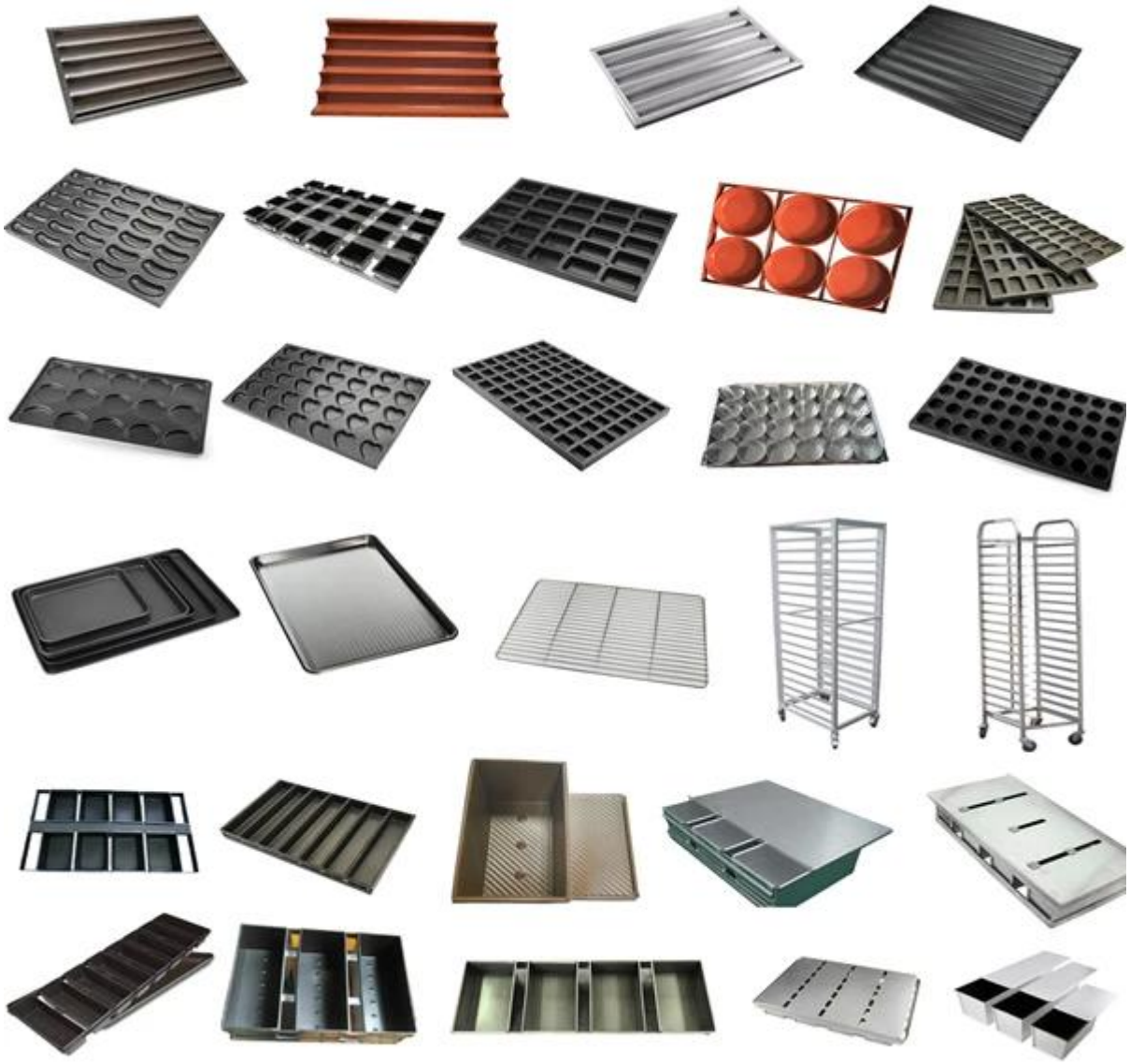
□□□□