450g □□□□

Product Specification

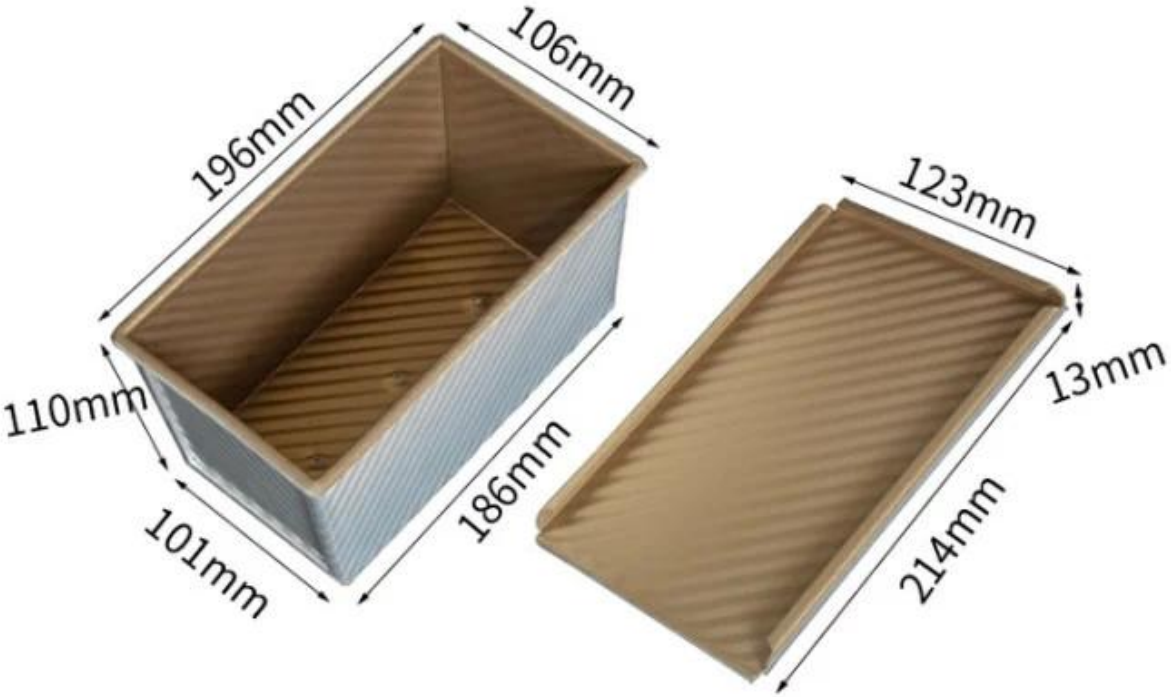

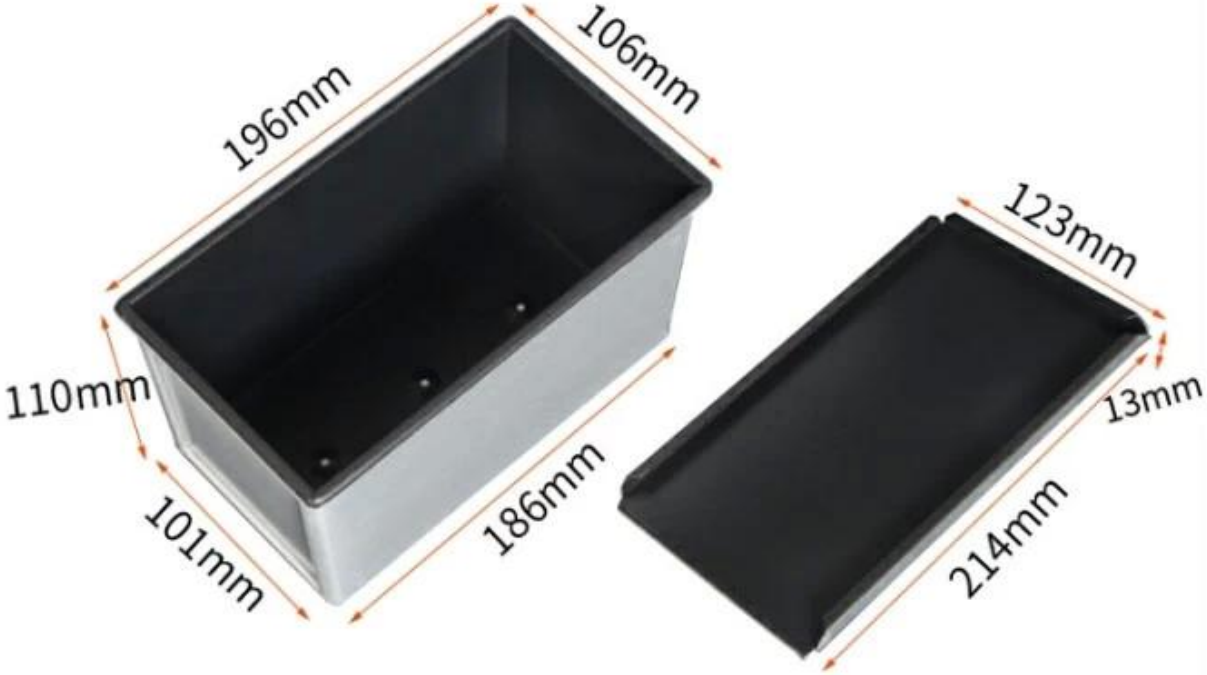

450g Black Nonstick corrugated surface

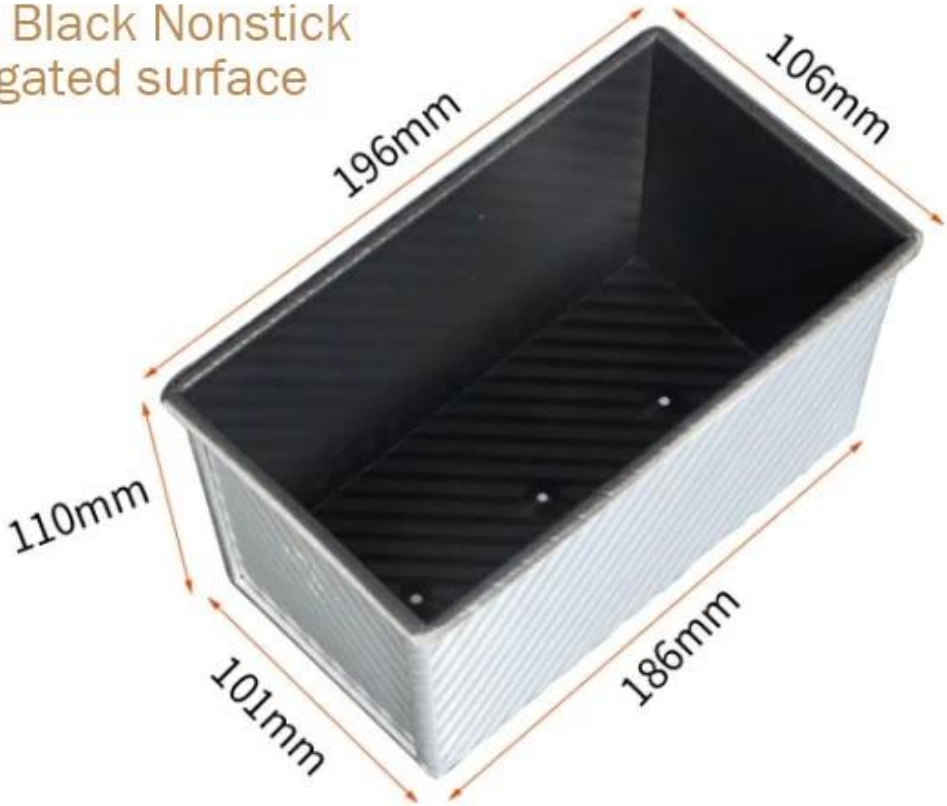

Good Heat Conductibity, baking evenly

Holes at the bottom for better baking effect

Loaf Pans in Application

Rolled edge with reinforced wire

□□□□□□□ □□□□□□□□□□□□□□

□□□□□□□□□□□□□□□ □□□□□□ □□□□□□□□□□□□□

□□□□□□□□□□□□□□□□ □□□□□□□□□□□□□□□□□□□ □□ □□□□□□□□□□□□□□□□□□□□□□□□□□□□ □□□□ □□□□□

□□□□□□□□: □□□□□□□□□□□□□□□□□□□□□□□□□□□□□□

□□□□□□□□□□: □□□□□□□□□□□□□□□□□□□□□□□□□□□□□

□□□□□□□□□□□□□□□□□□□□□□□□□□□□□□□□

□□□□□□□□: □□□□□□□□□□□□□□□□□□□□ □□□□□ □□□□□□□□□□□□□□□□□□□□□□□□□□

□□□□: □□□□□□□

□□□□□□□□□□□□□□□□□□□□□□□□□□□□

customized single loaf pan

Teflon coating
Silicone coating
Material:
Aluminum alloy
Aluminized steel

□□□□ □□□□□□□□□□□□□□□□□□□□□□□□□□□□1□□□□□□□□□□□□□□□□□□□

□□□ 12 □□□□□□□□□□□□□□□□□□□□

More Customzied Strap Loaf Pans from Tsingbuy

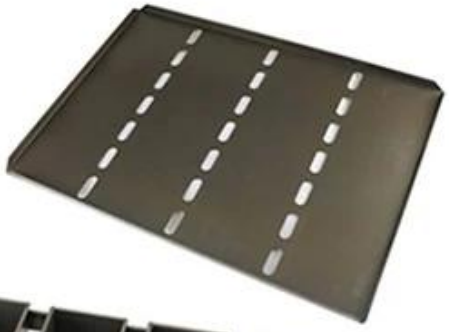

Customized shape

Customized size

Rack matched

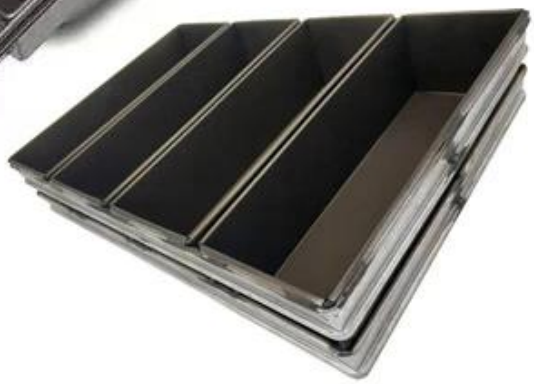

Customized Single Loaf Pan

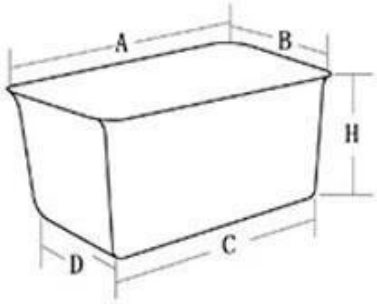

A.Top length of the item
B.Top width of the item
C.Bottom length of the item
D.Bottom width of the item
H.Height

Customized Strapped Loaf Pan Sets

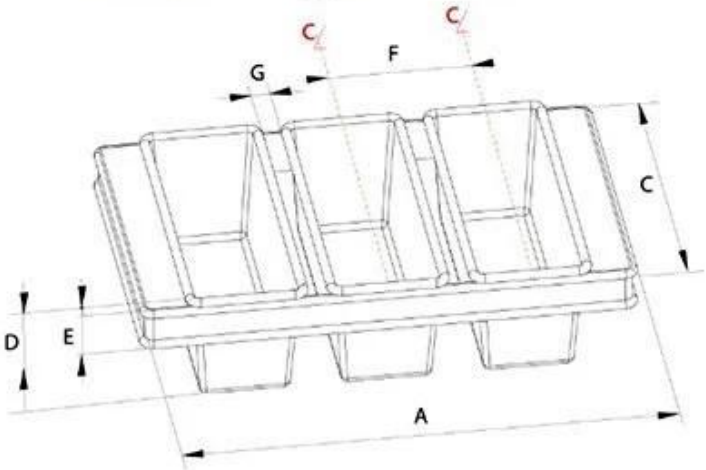

A.Overall Length
C.Overall Width
D.Depth
E.Frame Height
F.Center-to-center
G.Pan Distance

Flat handle

Frame handle

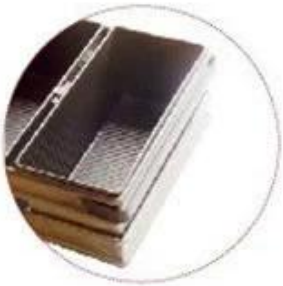

no handle

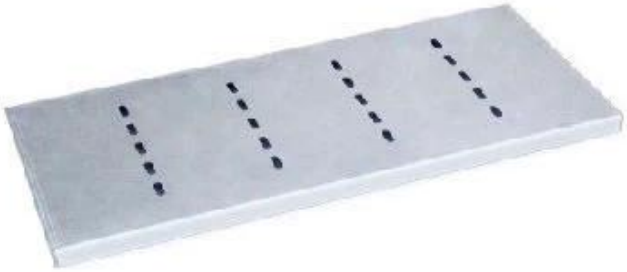

Matching lid (Drop Style)

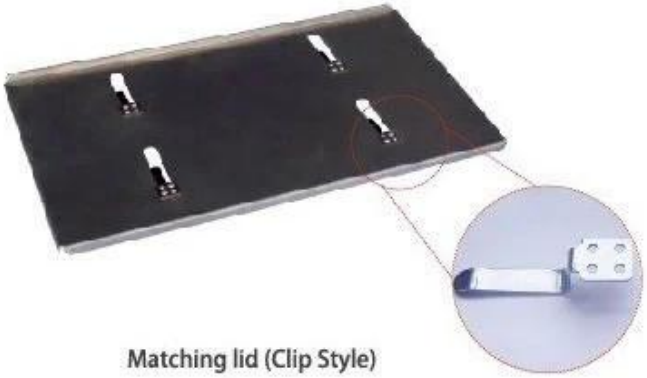

Matching lid (Clip Style)

□□□□□□□□□□

Loaf Pan

Tsingbuy Industry Limited

TSINGBUY | 天仕迈

□□□□□□ □□□□□□□