[illegible]

[illegible]

1[illegible]

2. [illegible]: 3 [illegible]

3. [illegible]: [illegible]

4. [illegible]

5. [illegible]: Tsingbuy [illegible] [illegible] 15 [illegible]!

[illegible]

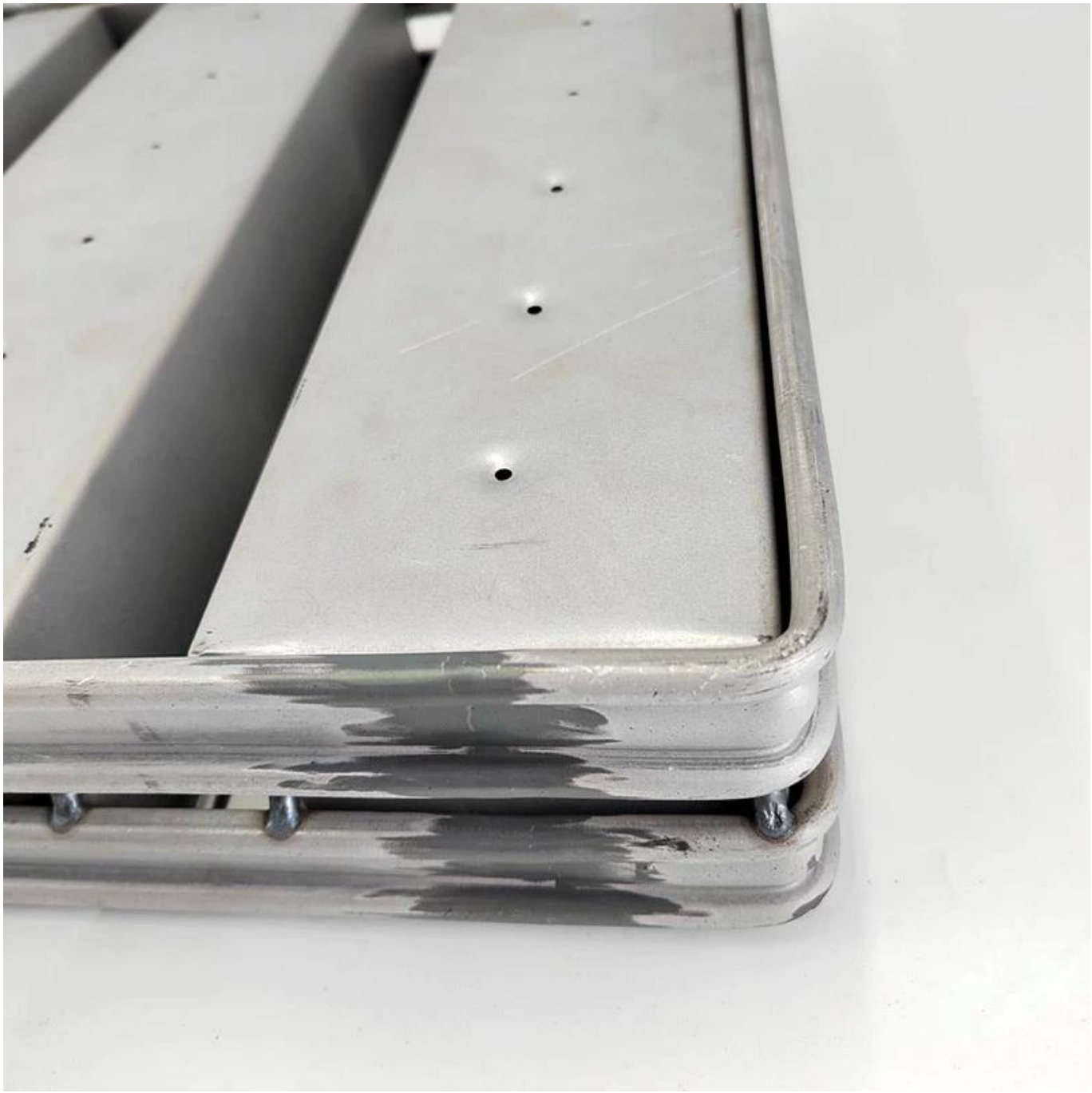

Tsingbuy[illegible]

More Customzied Strap Loaf Pans from Tsingbuy

Customized Single Loaf Pan

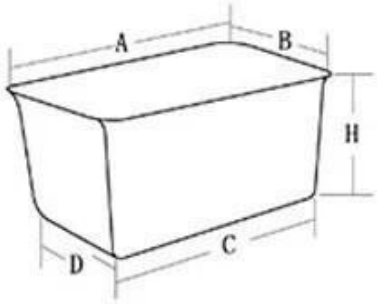

A.Top length of the item
B.Top width of the item
C.Bottom length of the item
D.Bottom width of the item
H.Height

Customized Strapped Loaf Pan Sets

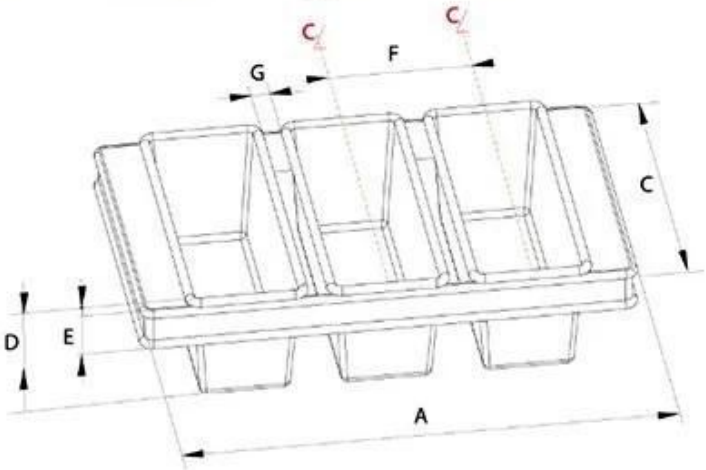

A.Overall Length
C.Overall Width
D.Depth
E.Frame Height
F.Center-to-center
G.Pan Distance

Flat handle

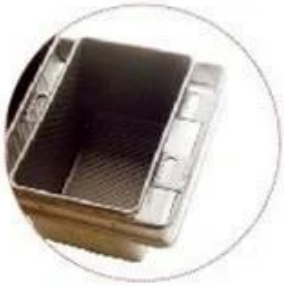

Frame handle

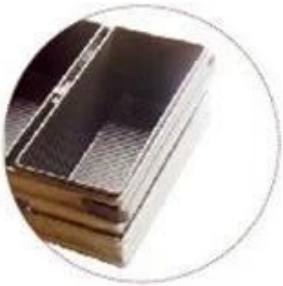

no handle

Matching lid (Drop Style)

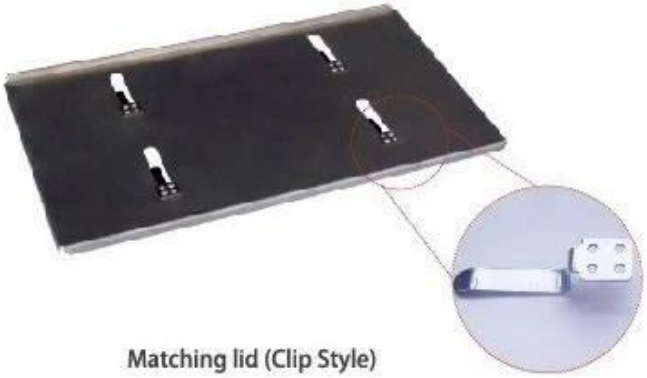

Matching lid (Clip Style)

Customized shape

Customized size

Rack matched

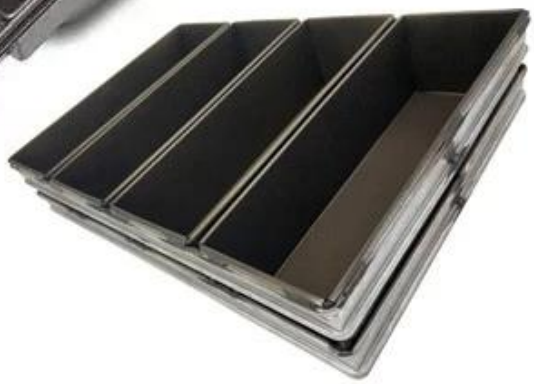

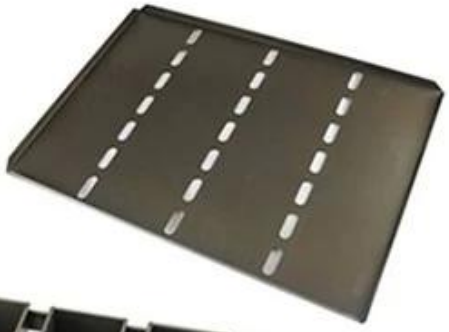

Procedures for custom made loaf baking pans

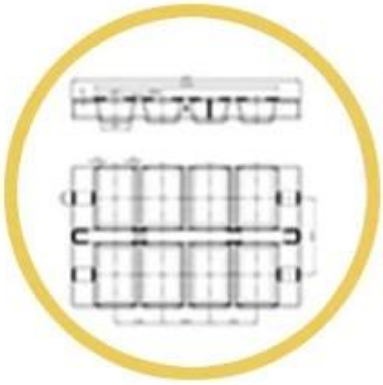

1. DRAWING

2.DESIGN

3.PRODUCT

4.PACKING

5.LOADING

6.SHIPPING

[illegible]

[illegible]Tsingbuy [illegible] [illegible].

Single Loaf Pan
natural surface
corrugated
full perforation
Tsingbuy
nonstick
corrugated
golden color
holes at bottom
full perforation
custom size

Tsingbuy □□□□□ □□□ □□ □□□□□□□□□□□
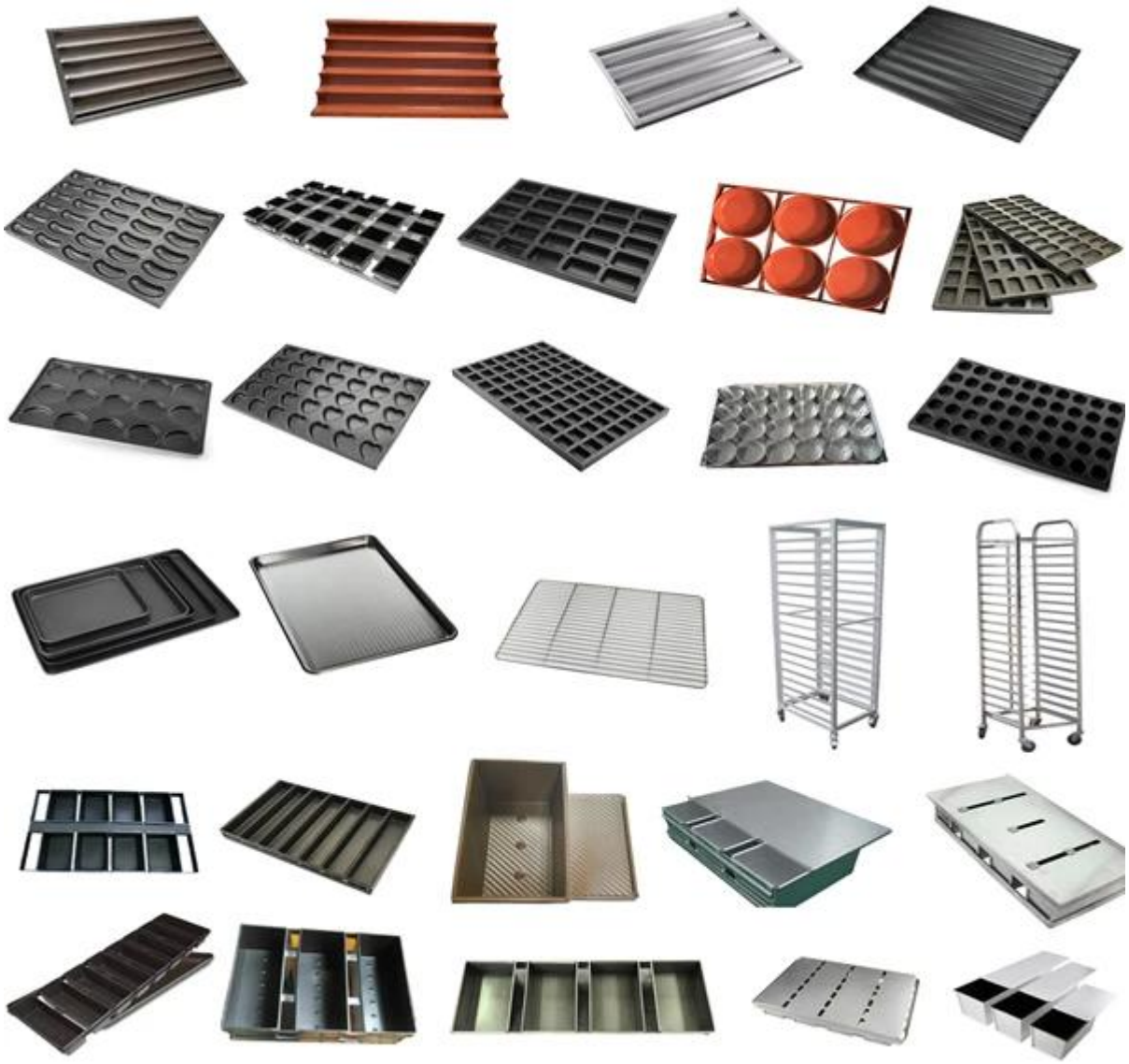
□□□ □□□□□□□Tsingbuy □□ □□□□□
□□□□□□□□□□□□