□□□□□1500g □□□□□□□□□□□□□□□□□

□□□□□□□□□□ □□□□□□ □□□□□□□ □□□□□□□□□□□□□□□□□□

1□ □□□□□1.0mm □□□□□□□□□ □□□□□□□□□□□
2□ □□□□□□□□□□□□□□□□□□

□□□□□□□ □□□□□□□□□□□□□&□□

Tsingbuy□□□□□□□□□□□□□□□□□□ □□□□□□□□□□□□

□□□□□□□□s□□□□□□□□□□□□□□□□□□□□□□□□□□□□□□l□ □□□□□□□□□□□□□□□□□□□□□□ □□□ □□□□□

□□□□□□□□□□□□□□□□□□□□□□□□□□□□□□□□□□

□□□□□□□□□□□□□□□□□□□□□□□□□□□□□□□□□□

□□□□□□□□□□□□□□□□□□□□□□□

□□□□□□□□□□□□□□□□□□□□□□□□□□ □□□□ □□□□□□□□□□□□□□□□□□□□□□□

□□□□□□□□□□□

□□□□□□□□□□□□□□□□□□□□□□

customized single loaf pan

Teflon coating
Silicone coating
Material:
Aluminum alloy
Aluminized steel

□□□□ □□□□□

More Customzied Strap Loaf Pans from Tsingbuy

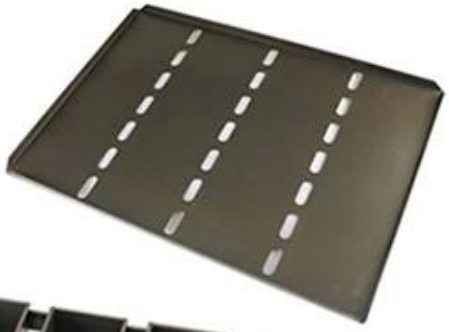

Customized shape

Customized size

Rack matched

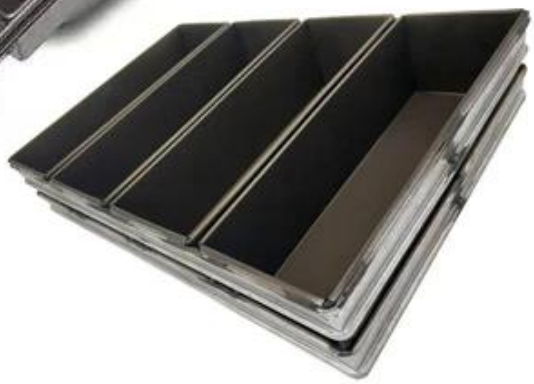

Customized Single Loaf Pan

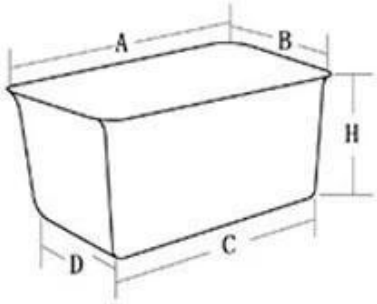

A.Top length of the item
B.Top width of the item
C.Bottom length of the item
D.Bottom width of the item
H.Height

Customized Strapped Loaf Pan Sets

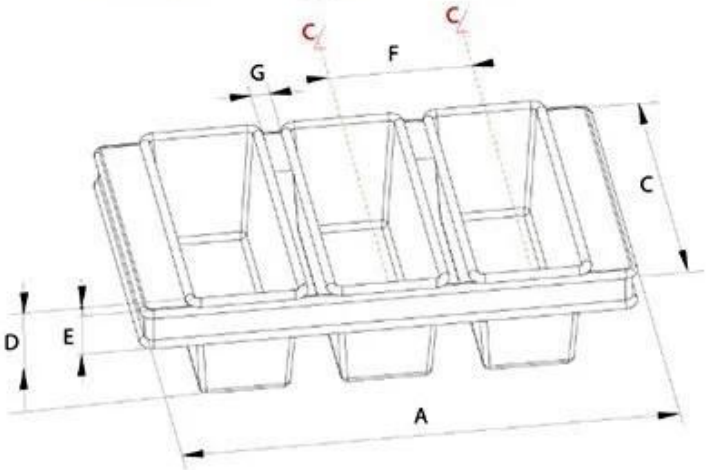

A.Overall Length
C.Overall Width
D.Depth
E.Frame Height
F.Center-to-center
G.Pan Distance

Flat handle

Frame handle

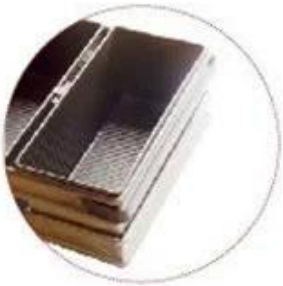

no handle

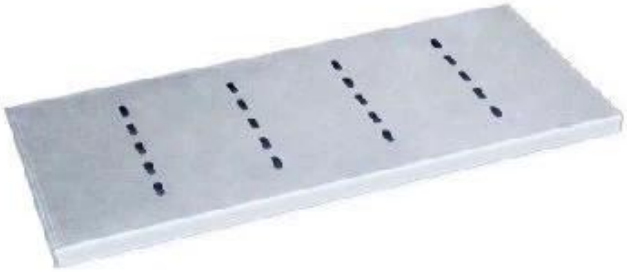

Matching lid (Drop Style)

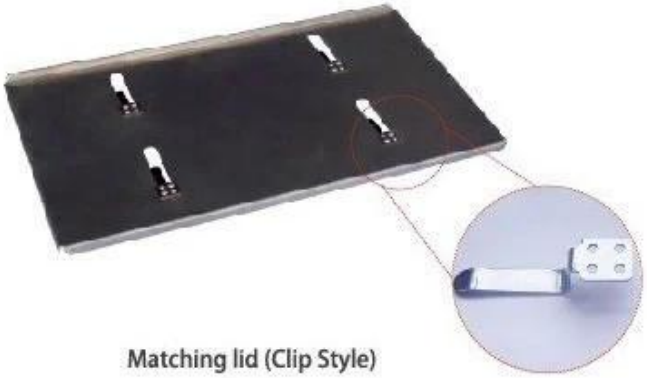

Matching lid (Clip Style)

□□□□□

Loaf Pan

Tsingbuy Industry Limited

TSINGBUY | 天仕迈

□□□□□□

Zoe Lee	TSINGBUY INDUSTRY LIMITED FACTORY PLANET OEM & ODM - Bakeware and Customization	
Tel	+86 186 1186 6087	+86 0755-85234769
Email	marketing@tsingbuy.com	
Skype	+86 186 1186 6087	
Whatsapp	+86 186 1186 6087	
Web	www.chinabakeware.com	
ADD	2 Floor B1 Building,No 22 Dafu Industry park,Guanlan,Longhua District, Shenzhen, China 518110	