Wholesale Heavy Duty Aluminum Alusteel Corrugated Non Stick Loaf Pan Toast Bread Baking Tin Loaf Tin for Home Kitchen and Commercial Bakery Restaurant Use

Main features of heavy duty aluminum corrugated loaf pan bread tin

1. Natural heavy duty alumium bakeware is made of high quality aluminized steel which is much more durable for long service life which keeps good baking efficiency and performance.

2. Baked goods rise and bake evenly due to alusteel superior heat conductivity and the reinforced encapsulated steel rim prevents warping

3. Easy clean up, hand wash only

4. Tsingbuy **non stick loaf pan supplier** is professional bakeware manufacturer with over15-year devotion in baking pans ODM&OEM service.

Product images of heavy duty aluminum corrugated loaf pan bread tin

More types of bread & loaf pans for your information

Here are more designs for bread loaf pans.

Our Pullman loaf pans is designed with simple style, beautiful and practical with fast heat conduction, even heating, not easy to appear partial scorch.

Material optional: aluminum, aluminized steel, stainless steel

Perforation options: no perforation, bottom-perforated, all-perforated

Using scene: single loaf pan, strap loaf pan

Surface options: smooth, corrugated, no-coating, Teflon non-stick, silicone non-stick

Size: any size

Lid: with lid or not as your requirement.

Besides **wholesale aluminum loaf pans** in single box, ODM&OEM service of sheet pan, baguette pan, multi-mould cupcake pan, strap loaf pan is also one of our biggest strength, welcome for more info.

We have engaged in bakeware manufacturing for over 12 years and has been supplying thousands of bakeware for international customers. Using our baking pan, you can easily make all kinds of delicious food, Chiffon cakes, mousse cake, Pound cake, cheese cake, etc

More Customzied Strap Loaf Pans from Tsingbuy

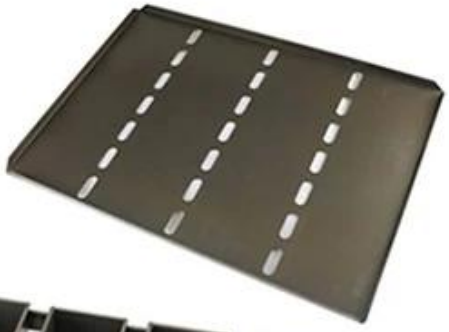

Customized shape

Customized size

Rack matched

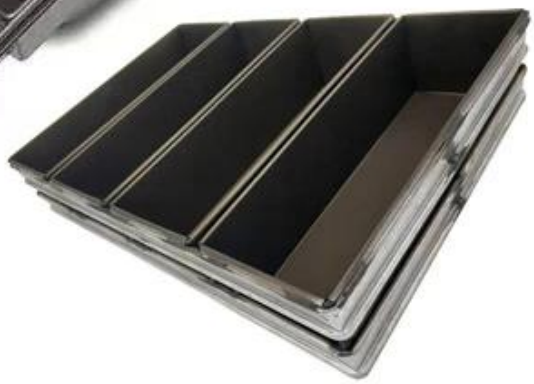

Customized Single Loaf Pan

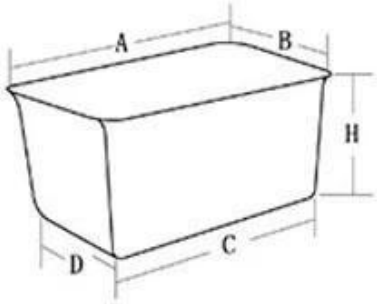

A.Top length of the item
B.Top width of the item
C.Bottom length of the item
D.Bottom width of the item
H.Height

Customized Strapped Loaf Pan Sets

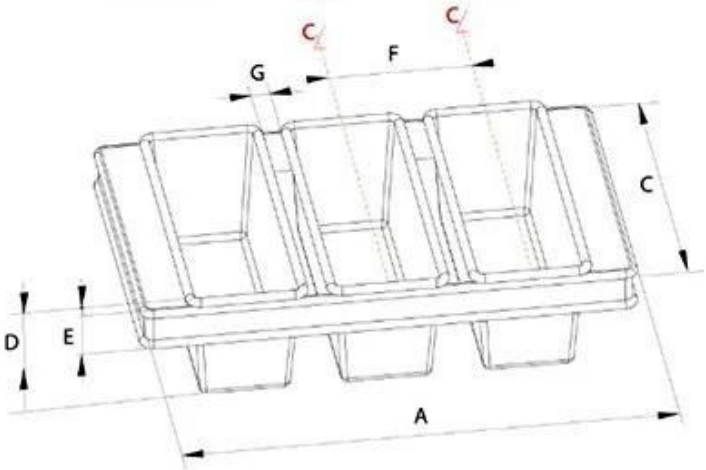

A.Overall Length
C.Overall Width
D.Depth
E.Frame Height
F.Center-to-center
G.Pan Distance

Flat handle

Frame handle

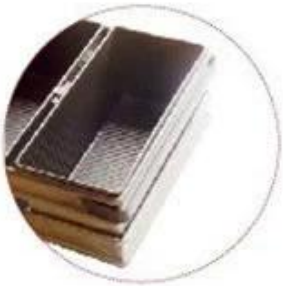

no handle

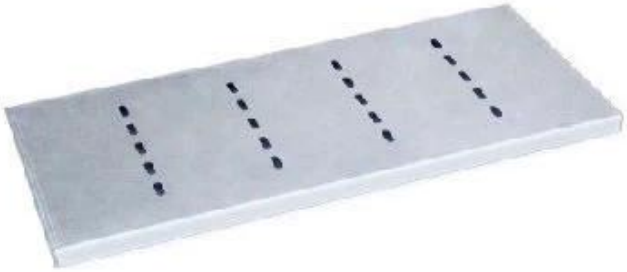

Matching lid (Drop Style)

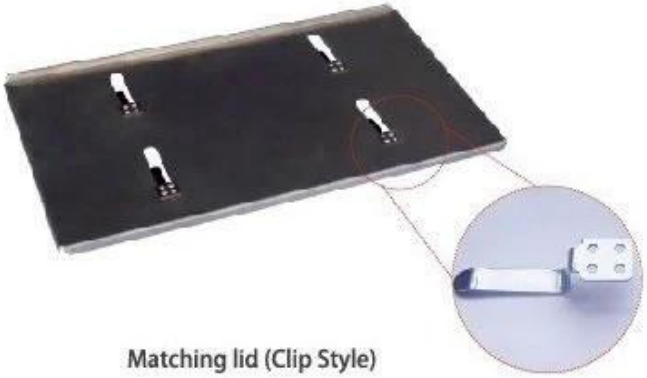

Matching lid (Clip Style)

Factory pictures

Besides **aluminum bread tin wholesale**, Tsingbuy bakeware manufacturer also produces sheet pan, loaf pan, baguette pan, cupcake baking pan, cake pan etc for bakeries, food factories, restaurants for commercial use. ODM&OEM service is our greatest strength. Welcome to contact us if you are looking for commercial baking pans.

Loaf Pan

Tsingbuy Industry Limited
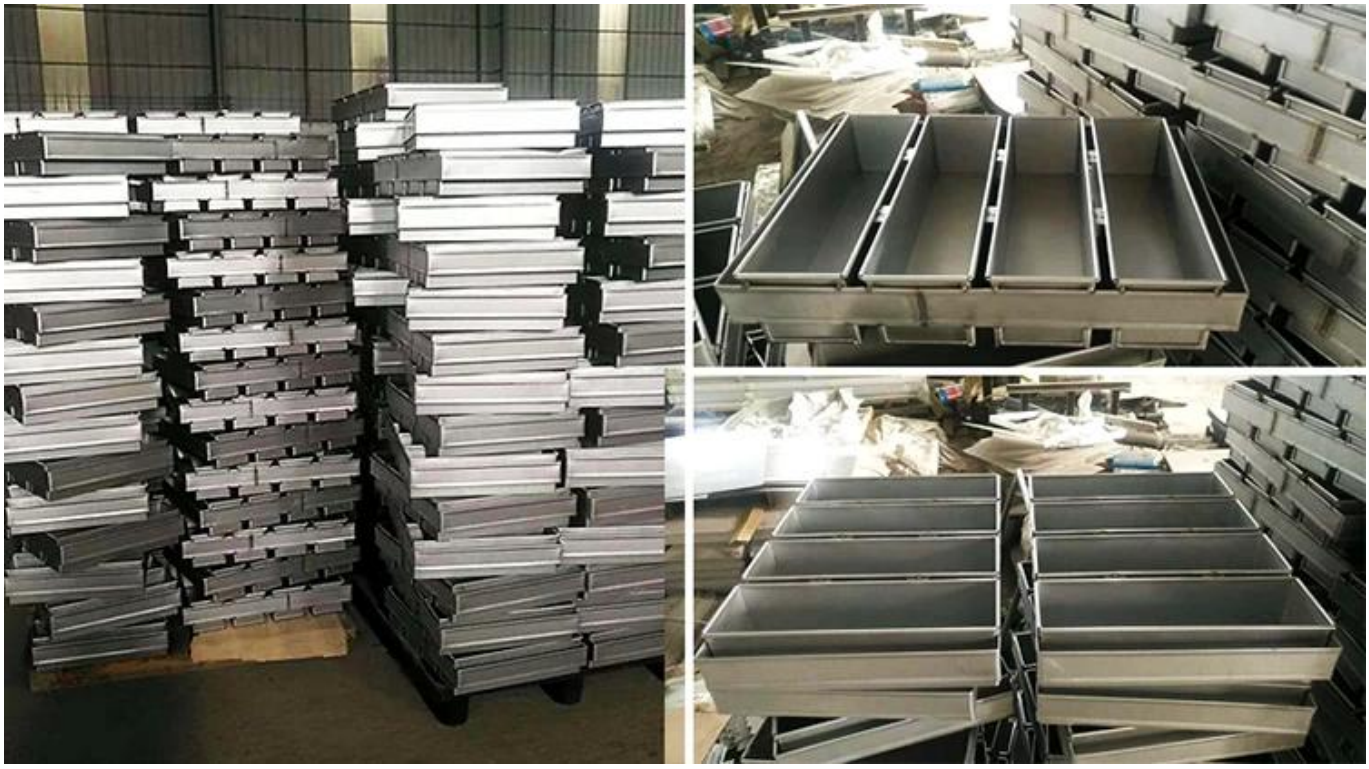
TSINGBUY | 天仕迈